Global strategies to reduce the health-care burden of craniofacial anomalies

Report of WHO meetings on International Collaborative Research on Craniofacial Anomalies

Geneva, Switzerland, 5-8 November 2000
Park City, Utah, USA, 24-26 May 2001

Human Genetics Programme, 2002
Management of Noncommunicable Diseases
World Health Organization
Geneva, Switzerland

Global strategies to reduce the health-care burden of craniofacial anomalies

Report of WHO meetings on International Collaborative Research on Craniofacial Anomalies

Geneva, Switzerland, 5-8 November 2000
Park City, Utah, USA, 24-26 May 2001

Human Genetics Programme – 2002
Management of Noncommunicable Diseases
World Health Organization
Geneva, Switzerland

This report is dedicated to the memory of

Dr David Barmes,

a former staff member of the World Health Organization and founder of the International Collaborative Research Project on Craniofacial Anomalies.

Acknowledgements: These meetings were organized by the World Health Organization, with financial support from the National Insititute of Dental and Craniofacial Research (NIDCR) of the National Institutes of Health (United States). In particular, the participants of the meetings wish to express their sincere thanks to Dr Kevin Hardwick and Dr Rochelle Small from NIDCR for their support and advice.

WHO Library Cataloguing-in-Publication Data

Global strategies to reduce the health-care burden of craniofacial anomalies : report of WHO meetings on International Collaborative Research on Craniofacial Anomalies, Geneva, Switzerland, 5-8 November 2000 ; Park City, Utah, U. S. A., 24-26 May 2001.

1.Craniofacial abnormalities – etiology 2.Craniofacial abnormalities – therapy 3.Cleft lip – epidemiology 4.Cleft palate – epidemiology 5.Evidence-based medicine – standards 6.Cost of illness 7.Research 8.Practice guidelines

I.WHO Meeting on International Collaborative Research on Craniofacial Anomalies (1st : 2000 : Geneva, Switzerland) II.WHO Meeting on International Collaborative Research on Craniofacial Anomalies (2nd : 2001 : Park City, Utah)

ISBN 92 4 159038 6 (NLM classification: WE 705)

© 2002 World Health Organization

All rights reserved. Publications of the World Health Organization can be obtained from Marketing and Dissemination, World Health Organization, 20 Avenue Appia, 1211 Geneva 27, Switzerland (tel: +41 22 791 2476; fax: +41 22 791 4857; email: bookorders@who.int). Requests for permission to reproduce or translate WHO publications – whether for sale or for noncommercial distribution – should be addressed to **Publications**, at the above address (fax: +41 22 791 4806; email: permissions@who.int).

The designations employed and the presentation of the material in this publication do not imply the expression of any opinion whatsoever on the part of the World Health Organization concerning the legal status of any country, territory, city or area or of its authorities, or concerning the delimitation of its frontiers or boundaries.

The mention of specific companies or of certain manufacturers' products does not imply that they are endorsed or recommended by the World Health Organization in preference to others of a similar nature that are not mentioned. Errors and omissions excepted, the names of proprietary products are distinguished by initial capital letters.

The World Health Organization does not warrant that the information contained in this publication is complete and correct and shall not be liable for any damages incurred as a result of its use.

This report contains the collective views of an international group of experts, and does not necessarily represent the decisions or the stated policy of the World Health Organization.

Cover by WHO Graphics.
Printed in France.

Contents

List of boxes ..... *v*

Acronyms and abbreviations ..... *vii*

Executive summary ..... *ix*

1. Introduction **1**

2. Global epidemiology and health burden of CFA **4**

2.1 Global epidemiology 4
2.2 Recommendations for producing better descriptive statistics in OFC 11
2.3 Conclusions 13

3. Possibilities for improving the treatment of CFA **14**

3.1 Evidence-based care 14
3.2 Quality improvement 32
3.3 Access and availability 36
3.4 Regional perspectives 38

4. Role of environment in CFA **41**

4.1 Socioeconomic status and orofacial clefts 41
4.2 Nutrition and orofacial clefts: general issues 42
4.3 Folic acid: nutritional biochemistry and orofacial clefts 45
4.4 Other specific nutrients and orofacial clefts 49
4.5 Lifestyle, occupational and other environmental factors in orofacial clefting 50
4.6 Conclusions 53

5. Role of genes in CFA **54**

5.1 Embryogenesis 55
5.2 Clinical definition of craniofacial anomalies 57
5.3 Mouse models 59
5.4 Genotyping 60
5.5 Recent developments 66

6. Gene/environment interactions ... 67

6.1 Introduction ... 67
6.2 Data challenges ... 68
6.3 Methodology challenges ... 70
6.4 Collaboration challenges ... 71
6.5 Conclusions ... 73

7. Prevention of CFA ... 74

7.1 Meeting objectives ... 74
7.2 Environmental and behavioural factors and orofacial clefts ... 75
7.3 Maternal nutrition and orofacial clefts ... 77
7.4 Nutritional supplementation ... 80
7.5 Ethical issues ... 84
7.6 The design of orofacial-cleft prevention trials ... 92
7.7 Conclusions ... 94

8. Conclusions and recommendations ... 96

8.1 Treatment of CFA ... 96
8.2 Gene/environment interaction ... 98
8.3 Genetics ... 100
8.4 Prevention ... 102

9. List of participants ... 104

10. References ... 114

Annex 1: European Collaboration on Craniofacial Anomalies (EUROCRAN) ... 137

Annex 2: Work packages ... 138

Annex 3: Policy statements ... 140

Annex 4: Practice guidelines ... 142

Annex 5: General principles governing record-taking (provisional) ... 144

List of boxes

Box A Recommendations for producing better descriptive statistics in OFC and epidemiology 12
Box B Sources of bias in CFA research 17
Box C Systematic planning for surgical trials 27
Box D Measuring treatment burden 28
Box E Priorities for research on treatment 31
Box F International recommendations on organization of cleft lip and palate services 33
Box G Worldwide variation in diet 43
Box H Maternal cigarette smoking in pregnancy 50
Box I Strategic approaches 60
Box J Collaborative strategies 65
Box K Gaps and challenges in the study of gene/environment interactions in orofacial clefting 68
Box L More people, more countries 72
Box M Objectives of the WHO meeting on the prevention of CFA 74
Box N Trials of maternal nutritional supplementation and orofacial clefts 80
Box O Future directions for orofacial-cleft prevention trials 83
Box P Ethical issues related to studies of maternal nutrition and birth defects 84
Box Q Equipoise 86
Box R Highest attainable and sustainable standard of care 91
Box S Role for WHO, governmental agencies and non-governmental organizations 95

Acronyms and abbreviations

AED	anti-epileptic drugs
AZT	azidothymidine
BCLP	bilateral cleft lip and palate
CAPS	Cleft Audit Protocol for Speech
CAT (scan)	computerized axial tomography
CDC	Centers for Disease Control and Prevention (United States of America)
CFA	craniofacial anomalies
CI	confidence interval
CIDR	Centre for Inherited Disease Research
CIOMS	Council for International Organizations of Medical Science
CL	cleft lip
CL/P	cleft lip – with or without cleft palate
CLP	cleft lip and palate
COR	Craniofacial Outcomes Registry
CP	isolated cleft palate
CPAP	continuous airway pressure
DNA	deoxyribonucleic acid
ECLAMC	Estudio Colaborativo Latino Americano Malformaciones Congenita
ENT	ear, nose and throat
ESF	European Science Foundation
EU	European Union
EUROCAT	European Registry for Congenital Anomalies and Twins
EUROCRAN	European Collaboration on Craniofacial Anomalies
FAS	fetal alcohol syndrome
FFQ	food-frequency questionnaire
GEI	gene/environment interaction

GOS.SP.ASS	Great Ormond Street speech assessment
HIV	human immunodeficiency virus
IARC	International Agency for Research on Cancer
IFR6	interferon regulatory factor 6
IMR	infant mortality rate
IU	international units
LRT	likelihood ratio test
mg	milligrams
MRC	Medical Research Council (United Kingdom)
MRI	magnetic resonance imaging
MSX	muscle-specific homeobox factor
NGO	non-governmental organization
NIH	National Institutes of Health (United States of America)
NTD	neural tube defects
OFC	orofacial clefts
OR	odds ratio
RCT	randomized controlled trial
RNA	ribonucleic acid
RR	relative risk
TCS	Treacher Collins syndrome
TDT	transmission disequilibrium test
TGF	transforming growth factor
UCLP	unilateral cleft of the lip and palate
VCF	velo-cardio-facial syndrome
VPI	velo-pharyngeal incompetence
WHO	World Health Organization
WMA	World Medical Association

Executive summary

In 2000, the WHO Human Genetics Programme, with financial support from the United States National Institute of Dental and Craniofacial Research, launched a five-year project designed to take forward an international research strategy on craniofacial anomalies (CFA). The specific objectives of this initiative are:

- to develop an international network for consensus building, planning and protocol development for international, collaborative, biomedical, epidemiological and behavioural studies in the core areas of CFA research;
- to create a directory of CFA research resources, and
- to establish a publicly-accessible research database on the Internet.

As a first step of this initiative, a consensus conference of international experts covering the four selected areas for research – treatment of CFA, gene/environment interaction (GEI), genetics, and prevention – was held under the auspices of the World Health Organization (WHO). The conference comprised two meetings – the first, held in Geneva from 5-8 November 2000, included concurrent workshops on research concerning the genetic basis of CFA, gene/environment interactions, and the treatment of CFA; the second, held in Utah from 24-26 May 2001, considered the prevention of CFA.

The aims and objectives of the WHO consensus meetings were to:

(1) obtain counsel from experts involved in CFA research around the world;

(2) describe the "state-of-the-science" with regard to treatment, genetics, gene/environment interaction and prevention, and highlight recent relevant research;

(3) discuss requirements for future research in all areas of craniofacial anomalies; and

(4) arrive at a consensus on approaches to address data gaps and proceed with strategies, methodologies and protocols to advance knowledge.

A. Treatment

Three interrelated research issues were addressed within the clinical theme:

(1) **Evidence-based care:** the identification and dissemination of optimal clinical interventions for the management of CFA.

(2) **Quality improvement:** the development and dissemination of methodologies for monitoring and improving the delivery of clinical services.

(3) **Access and availability:** the identification of strategies to maximize access to adequate levels of care for all affected individuals, irrespective of nationality.

B. Gene/environment interaction

Issues discussed in relation to the planning of future collaborative gene/environment interaction (GEI) research were:

■ Identification of data gaps

(1) Use birth surveillance systems to determine the frequency of craniofacial anomalies and sources in ascertainment.

(2) Identify areas of the world where interesting populations or patterns of craniofacial anomalies exist, and gain access to those populations.

(3) Evaluate whether an established infrastructure exists to allow research in GEI to proceed.

(4) For GEI research it will be essential to carefully categorize samples by type of defect, to identify (and exclude) syndromes that are known to have a genetic etiology and, where possible, to control methodologic and demographic parameters which might confound biochemical and genetic analyses. This type of research is therefore predominantly applied to non-syndromic orofacial clefts.

(5) GEI research should seek to establish the frequency of genotypes in different populations and ethnic groups and establish the risk of orofacial clefts associated with:

   (a) the gene variant alone,
   (b) environmental exposures alone, and
   (c) gene/environment interaction.

Study design and standardization issues

Having identified data gaps, appropriate research hypotheses can be generated. Agreement will be required on the data to be collected, the methods of sample collection and the geographical areas where research would be carried out. In time it would be anticipated that the research would address the data gaps identified and would raise further issues that would be addressed by generating further hypotheses to be tested in a cycle of enquiry and research.

Common core protocols

It was agreed that the standardization of research would require the development of guidelines to provide consistency between groups collecting data. Such common core protocols would be developed in the areas of:

(a) nutritional, lifestyle and occupational factors;
(b) medical, obstetric and drug histories;
(c) genetic and biochemical data collection;
(d) assessment of clinical dysmorphology and collection of consistent family history data;
(e) agreed guidelines for ascertainment of cases and, where appropriate, controls.

C. Genetics

While there is an inevitable overlap between research in genetics and in gene/environment interaction, CFA research will benefit from an intensive genetics approach.

(1) The discussions on the genetics component of the WHO CFA Conference focused on those technologies, analytic approaches, and populations that will best advance our understanding of the etiologies of craniofacial abnormalities, with particular reference to those with strong genetic components.

(2) While recognizing that the environment and stochastic events play an important and, often, major role in predisposing to craniofacial anomalies, the role of genetics is compelling in many situations.

(3) Funding, manpower training, bioethical and government policy issues also influence research. These should be discussed and addressed in the light of identified differences in the demographics and infrastructure in different regions, and research priorities should be established geographically and according to agreed criteria.

D. Prevention

(1) Identify environmental and behavioural factors with established associations with orofacial clefts and other CFA.

(2) Review evidence on the role of specific maternal nutritional factors in the etiology of orofacial clefts and other CFA.

(3) Reach a consensus regarding the role and importance of nutritional supplementation trials in evaluating the causal role of specific nutrients in the etiology of orofacial clefts and other CFA.

(4) Discuss aspects of the design of orofacial cleft and CFA prevention trials and their ethical, legal, social and financial implications.

(5) Make recommendations on the resources needed to implement international collaborative studies of CFA prevention with common core protocols.

Section 8 provides details of the recommendations for future research arising out of these two WHO consensus meetings.

1 Introduction

Craniofacial anomalies (CFA) are a highly diverse group of complex congenital anomalies. Collectively they affect a significant proportion of the global society *(see Table 1 below)*.

Table 1: Examples of most common craniofacial anomalies

	Prevalence at birth: per 10 000
Cleft lip ± palate	
Caucasian	10
Japanese	20
Native (North) Americans	36
African American population	3
Cleft palate	
Averaged across races	5
Craniosynostosis	3
Crouzon syndrome	0.4
Apert syndrome	0.15
Otomandibular anomalies	1.2
Treacher Collins syndrome	0.2
CHARGE Association	1
Holoprosencephaly	1.2
Stickler syndrome	1
Fetal alcohol syndrome	2

Source: Rovin et al., 1964, Temple, 1989; Cohen et al., 1992; Lewanda et al., 1992; Croen et al., 1996; Derijcke et al., 1996; Sampson et al., 1997; Blake et al., 1998.

The prevalence of individual conditions varies considerably across geographic areas and ethnic groupings. Their impact on speech, hearing, appearance and cognition has a prolonged and adverse influence on health and social integration. The costs incurred from CFA in terms of morbidity, health care, emotional disturbance, and social and employment exclusion are considerable for affected individuals, their families and society. Research that will increase the understanding of the causes of CFA, improve the treatment for it, and lead ultimately to its prevention or reduction, has mainly been pursued in the absence of an international strategy. Yet international collaboration is a prerequisite for accessing adequate samples for research in etiology, treatment and prevention, and also for the assembly of a critical mass of clinical researchers and basic scientists in fields such as molecular biology, genetics, biochemistry and epidemiology.

Great confusion surrounds the optimal management for even the most common conditions

The treatment of CFA has, so far, escaped the rigours of contemporary health technology assessment, and great confusion surrounds the optimal management for even the most common conditions. For each of the many subgroups of CFA, the attainment of homogeneous samples of adequate size for randomized trials and long-term follow-up represents a formidable challenge. Multi-site cooperation is essential. In the developing world, the costs of rehabilitation and problems of access put treatment beyond the reach of vast numbers of affected individuals. Systems for delivering care in different geographic and economic circumstances urgently require research.

The potential of research on the genetic basis of CFA has increased dramatically over the last decade with the development of recombinant DNA technology. In over 50 craniofacial syndromes, genes involved have either been mapped to a chromosome location or actively isolated and their structure identified. This achievement, however, represents only a fraction of the total number of craniofacial syndromes defined. The pathogenesis of the most common forms of CFA – non-syndromic clefts of lip and/or palate – is especially challenging because they appear to arise from complex polygenic interactions with environmental factors. A coordinated international approach would not only provide effective means of sharing data, samples and resources, but would allow strategic exploitation of geographic and ethnic variation in the incidence and pathogenesis of CFA.

Research that may lead to the prevention of CFA has been based, primarily, on isolated case control studies in Asia, Europe, Latin America and the United States of America. As yet, these projects have occurred independently of each other, and consistent conclusions about viable interventions such as dietary supplementation in the periconceptual

period have yet to emerge. Once again, international standardization of research protocols, consensus on preventive interventions suitable for clinical trials, and the performance of trials in an international framework, would enhance the validity, consistency and generalizability of these efforts.

Efforts to define an international research strategy go back more than a decade when the proposals for "International Collaboration on Oral Health" were jointly published by WHO, the International Dental Federation (FDI), and the US National Institute for Dental and Craniofacial Research. More recently these proposals were renewed at a series of consensus meetings:

- Eighth Congress of the International Confederation of Craniofacial Teams, Singapore, 1997;
- Craniofacial Genetic Diseases and Disorders Planning Workshop, Bethesda, USA, 1997;
- International Collaboration on Oral Cleft Genetics Second Meeting, Baltimore, USA, 1998; and
- Meeting of the International Task Force on CFA, Bauru, Brazil, 1998.

In 2000, the WHO Human Genetics Programme, with financial support from the US National Institute of Dental and Craniofacial Research, launched a five-year project designed to take these proposals forward. The specific objectives of this initiative have been to develop an international network for consensus building, planning and protocol development for international, collaborative, biomedical, epidemiological and behavioural studies in the core areas of CFA research, and to create a directory of CFA research resources and a publicly-accessible research database on the Internet.

This report is based on the first two consensus meetings of international of experts held under the auspices of WHO. The first meeting, held in Geneva, 5-8 November 2000, included concurrent workshops on research concerning the genetic basis of CFA, gene/environment interactions, and the treatment of CFA. The second meeting, held in Utah, 24-26 May 2001, considered the prevention of CFA.

2 Global epidemiology and health burden of CFA

2.1 Global epidemiology

Cleft lip, with or without cleft palate (CL/P), and isolated cleft palate (CP) are serious birth defects which affect approximately 1 in every 600 newborn babies worldwide. This means that, assuming 15 000 children are born per hour worldwide (United States Bureau of the Census, 2001), a child is born with a cleft somewhere in the world approximately every 2½ minutes. From birth to maturity, children with orofacial clefts (OFC) undergo multidisciplinary surgical and non-surgical treatment with considerable disruption to their lives, and often with adverse psychological consequences to themselves and their families.

Over the years efforts have been made to record frequency of birth defects. Accurate data on the epidemiology are important not only for documenting the burden in relation to the planning of public health services, but also because they form the basis for research into the causes. The eventual objective, from both scientific and humanitarian viewpoints, must be to advance the knowledge and understanding of causative factors so as to be able to institute primary preventive measures. Among the barriers to achieving this objective are: (a) the heterogeneity of orofacial clefting; (b) the lack of standard criteria for the collection of data; and (c) in particular the lack of and/or failure to apply an internationally comparable classification for orofacial clefting.

The level of ascertainment differs between countries, depending on the method of cleft birth registration; the number of live births, terminations, stillbirths and syndromic individuals can considerably affect the validity of such data. The critical requirement is to precisely define the "population" in which malformations are measured. The main issue is whether one reports or estimates rates in all conceptuses, all births, or all live births. The word *births* is somewhat ambiguous because it usually includes stillbirths, a term which does not have a uniform definition.

2.1.1 Epidemiological data summary

Epidemiological data for orofacial clefts from the three different sources outlined above are presented in peer-reviewed publications. Tables 2 and 3 (WHO, 1998) show data from the peer-reviewed literature and that collected through the International Clearinghouse Birth Defects Monitoring System (ICBDMS) and European Registration of Congenital Anomalies (EUROCAT).

Birth prevalence studies on patients with CL/P and CP over the second half of the 20th century reveal that whilst there are ethnic and geographic differences, the "average" birth prevalence of orofacial clefting in the world's western populations is often quoted as 1:1000 total births for CL/P and 1:2000 total births for CP *(see Tables 2 and 3)*. The birth prevalence of CL/P is highest in Australia (Aborigines), Canada, the Far East, India, Scandinavia, parts of South America, and the USA, and lower in Southern Europe. In general populations of Asian origin have a higher incidence than Caucasian populations which, in turn, have a higher incidence than African populations. The birth prevalence of CL/P varies from 2.7:1000 in Native Americans to 2.1:1000 in Japan and to 0.4:1000 in Nigeria and 0.42:1000 in African Americans (Leck, 1972), with the geographical variation being less important than ethnic differences.

Cleft palate alone (CP) has a lower average birth prevalence and shows less variation in different racial groups. The prevalence of CP is highest in Australia, Finland, and Scotland (United Kingdom), and in general is higher in Asians than Caucasians or Africans (Melnick, 1992). Generally CL/P occurs more frequently in males whereas for CP the reverse is true. Significant racial differences in the birth prevalence of orofacial clefts exist. Two thirds of all cases of unilateral CL/P have left-sided defects regardless of gender, race and severity of defect (Fraser and Calnan, 1961).

Migrants studies show that African Americans have lower rates for both CP and CLP than Whites in the United States, and a study in Birmingham (United Kingdom) also showed that those originating from the Caribbean have low rates of orofacial clefting (Leck, 1969; Leck and Lancashire, 1995). Studies in North America also reveal similar rates among Japanese-Americans and Chinese-Americans compared to Caucasian-Americans (Croen et al, 1998); there is also evidence that the frequency of CL/P (but not CP) may be significantly lower among US-born Japanese and other Asians born in California and New York than among those born in Japan or Hawaii (Tyan, 1982). The worldwide variation in the frequency of orofacial clefts (OFC) is likely therefore to be influenced by the variable predisposing factors that exist, depending on ethnicity and geography. When comparing the data, however, it is important to consider issues which affect the figures, such as: (a) statistical variability of recorded rates; (b) live births versus stillbirths; and (c) associated malformations.

Table 2: Cleft lip with or without cleft palate

	Live and stillbirths	Induced abortions	Total cases	Total births	Rates (per 10 000)	
Argentina	99	– (*)	99	73 942	13.4	↑
Australia – South Australia	–	–	19	19 801	9.6	
Australia – Victoria	26	47	73	65 182	11.2	
Belarus	–	–	–	–	–	
Belgium – Hainaut Namur	30	1	31	24 856	12.5	
Brazil	51	– (*)	51	36 689	13.9	
Chile	20	– (*)	20	22 276	9.0	
Czech Republic	113	–	113	107 153	10.5	
Denmark – Odense	17	0	17	12 054	14.1	
France – Bouches du Rhone	33	3	36	44 704	8.1	
France – Central East	74	4	78	100 074	7.8	↓
France – Paris	47	16	63	71 319	8.8	
France – Strasbourg	29	5	34	27 200	12.5	
Ireland – Dublin	31	– (*)	31	38 000	8.2	
Italy – Campania	38	2	40	43 325	9.2	
Italy – Emilia Romagna	25	–	25	25 924	9.6	
Italy – Toscana	42	1	43	48 991	8.8	
Japan	172	– (*)	172	113 702	15.1	↑
Mexico	81	– (*)	81	65 870	12.3	
Netherlands – North	52	6	58	38 670	15.0	↑
Norway	99	2	101	60 584	16.7	↑
Spain – Basque Country	114	2	16	31 248	5.1	↓
Switzerland	101	4	105	148 000	7.1	↓
United Kingdom – Belfast	10	1	11	49 482	2.2	↓
United Kingdom – Glasgow	19	1	20	22 570	8.9	
United Kingdom – North Thames	43	10	53	47 274	11.2	
USA – Atlanta	34	0	34	39 856	8.5	
USA – Hawaii	–	–	22	20 596	10.7	
Uruguay	17	– (*)	17	21 332	8.0	
Venezuela	21	– (*)	21	36 377	5.8	↓

Source: WHO (1998) World Atlas of Birth Defects (1st edition)

* Abortion for birth defect not permitted.

↑ = 99% significantly higher than the mean.

↓ = 99% significantly lower than the mean.

Table 3: Cleft palate without cleft lip

	Live and stillbirths	Induced abortions	Total cases	Total births	Rates (per 10 000)	
Argentina	43	– (*)	43	73 942	5.8	
Australia – South Australia	18	–	18	19 801	9.1	
Australia – Victoria	39	0	39	65 182	6.0	
Belarus	–	–	–	–	–	
Belgium – Hainaut Namur	15	2	17	24 856	6.8	
Brazil	19	– (*)	19	366 689	5.2	
Chile	13	– (*)	13	22 276	5.8	
Czech Republic	66	–	66	107 153	6.2	
Denmark – Odense	11	0	11	12 054	9.1	
France – Bouches du Rhone	23	5	28	44 704	6.3	
France – Central East	72	7	79	100 074	7.9	↑
France – Paris	36	14	50	71 319	7.0	
France – Strasbourg	21	2	23	27 200	8.5	
Ireland – Dublin	13	– (*)	13	38 000	3.4	
Italy – Campania	24	–	24	43 325	5.5	
Italy – Emilia Romagna	12	–	12	25 924	4.6	
Italy – Toscana	10	2	12	48 991	2.4	↓
Japan	52	– (*)	52	113 702	4.6	
Mexico	27	– (*)	27	65 870	4.1	
Netherlands – North	32	1	33	38 670	8.5	
Norway	26	0	26	60 584	4.3	
Spain – Basque Country	17	1	18	31 248	5.8	
Switzerland	63	3	66	148 000	4.5	
United Kingdom – Belfast	6	1	7	49 482	1.4	↓
United Kingdom – Glasgow	19	3	22	22 570	9.7	
United Kingdom – North Thames	20	2	22	47 274	4.7	
USA – Atlanta	12	1	13	39 856	3.3	
USA – Hawaii	12	–	12	20 596	5.8	
Uruguay	10	– (*)	10	21 332	4.7	
Venezuela	14	– (*)	14	36 377	3.8	
Total			**789**	**1 457 051**	**5.4**	

Source: WHO (1998) World Atlas of Birth Defects (1st edition)

* Abortion for birth defect not permitted.

↑ = 99% significantly higher than the mean.

↓ = 99% significantly lower than the mean.

2.1.2. Variability of recorded rates

The precision of recorded rates depends on the recording of the total population birth rate (denominator data) and the recognition and recording of the number of affected births. Since the incidence and birth prevalence of OFC is low, the variability of the rate depends primarily on the level of ascertainment and number of abnormal births recorded. The standard error of the observed number x (Poisson distribution) is simply its square root ($\sqrt{}$) and the width of the 95% confidence limit for x is 1.96 $\sqrt{}$ x. The width of the confidence interval as a percentage of the observed number is a measure of the precision. Studies that have a statistical variability of more than 30%, however, need to be interpreted with caution.

There is apparent variation in the proportion of OFC cases with additional congenital anomalies and syndromes

Many of the studies described in developing countries are based on hospital rather than general population figures so will only be accurate in communities where it is likely that the vast majority of births have occurred in hospital. In the interests of recording reasonably accurate data, information from registries only is displayed above, and the figures for some studies in Africa, India and the Middle East are excluded.

2.1.3. Live births versus stillbirths

The proportion of serious malformations is higher in stillbirths than in live births so including stillbirths tends to raise the birth prevalence or incidence rates above those that only consider live births. Similarly, inclusion of data on earlier loss – miscarriages and abortions – will increase rates over data that analyse only live births and stillbirths.

Vanderas (1987) examined the problem of inclusion or exclusion of stillbirths as an issue in ascertainment of OFC in a number of international studies, some of which included live births, stillbirths and abortions in their evaluation of incidence rate. The OFC rates were 6.43 per 1000 stillbirths versus 2.16 per 1000 live births in Hay's study (1971) of Caucasians in the United States (Iowa); and 2.72 per 1000 stillbirths versus 0.91 per 1000 live births in the pooled data Lutz and Moore (Lutz et al., 1955) compiled on African Americans, Mexicans and Caucasians. It appears, therefore, that in stillbirths and abortions the risk of developing clefts is about three times more frequent than in live births; and clefts with associated malformations behave differently epidemiologically from clefts without associated malformations.

A further study in Hungary (Czeizel et al., 1984) reported that the proportion of cleft palate without cleft lip is about sevenfold greater in stillbirths (primary fetal deaths 28 weeks or older) than in live births (2.38 per 1000 versus 0.36 per 1000). Whereas for cleft lip (with or without cleft palate), the ratio is a little less than threefold (3.17 per 1000 versus

1.15 per 1000). As may be expected, this differential between live births and stillbirths is greater for those orofacial clefts that occur in individuals with additional malformations elsewhere, than in those with only cleft lip, cleft palate, or both.

Krause (1963) examined human embryos and fetuses and reported that the frequency of clefts with associated malformations was 11.61 per 1000, and fetuses with clefts but without associated malformations were 7.22 per 1000. Nishimura (1966), reported the frequency of cleft lip with or without cleft palate in 1213 voluntarily aborted human embryos in Japan to be 14.7 per 1000. In a later Japanese study on 5117 voluntarily aborted human embryos, Iizuka (1973), found that the incidence of cleft lip (CL) was 4.3 per 1000, cleft lip and palate (CLP) 8.1 per 1000 and isolated cleft palate (CP) 3.2 per 1000.

It is for this reason that the indiscriminate grouping of figures which include not only live births but also stillbirths and/or induced abortions will not be comparable to those which quote live births only. If fetal deaths or earlier losses are included in summary rates, this should be noted specifically and rates should be presented separately for live births and for embryonic and fetal deaths.

2.1.4 Associated malformations

It is generally accepted that associated malformations occur more frequently in infants who have CP than in those who have CLP and even less still in those with isolated CL. For example, a 17-year study in North Eastern France reported the rate of associated malformations as 46.7% in CP, 36.8% in CLP and 13.6% in CL (Kallen et al., 1996). Cornel (1992) reported associated abnormalities in 23% of combined CL/P cases and in 52% of cases with isolated CP. Other studies that also found congenital anomalies to be much more commonly associated with CP than with CL/P were Ingalls et al., 1964; Drillien et al., 1966; Moller, 1972 and Emanuel et al., 1973. In the Finnish population, however, CL/P was as often associated with other malformations as was CP (Saxen et al., 1974). Familial background was also more often reported in association with CP than with CL/P in Finland; this is in contrast to that found by others, such as Fogh-Andersen (1942) in Denmark.

Some reports also sub-divide CL/P into unilateral and bilateral sub-groups when examining additional malformations and report an increase in additional malformations in the bilateral sub-group (e.g. Hagberg et al., 1997). When considering associated abnormalities some reports do not define what is meant by "associated abnormalities" while others give ambiguous descriptions, and Conway and Wagner (1966) record only the "10 most common" associated abnormalities listed on birth certificates over an 11-year period.

2.1.5 The prevalence of isolated cleft palate

There is considerable international variation in the frequency of OFCs

There is considerable heterogeneity in what is described as isolated cleft palate. Many figures for isolated cleft palate are provided without an adequate explanation of inclusion/exclusion criteria. For instance, the most common syndrome with isolated cleft palate as a feature is the Pierre Robin syndrome and its inclusion will therefore make a significant difference to the figures. This sub-group is also more susceptible to ascertainment bias as the prevalence of sub-mucous clefting within the general population is thought to be as common as overt isolated CP (Christensen and Fogh-Andersen, 1994). In a detailed study of isolated cleft palate in Denmark, these authors noted that there is a marked difference in sex ratios for non-syndromic overt CP including the hard palate, and non-syndromic overt CP of the soft palate only. This, combined with the tendency for hard palate and soft palate clefts not to occur within the same families, indicates that they may be two etiologically distinct sub-groups of cleft palate. Christensen and Fogh-Andersen (1994) therefore recommended that future studies on isolated cleft palate distinguish between hard palate, soft palate and sub-mucous hard palate in an attempt to disclose etiological heterogeneity within secondary palatal clefting.

The inclusion of the Pierre-Robin anomaly is also complicated by the fact that the diagnosis of Pierre-Robin is inconsistent; e.g. some clinicians insist that respiratory distress is an essential part of the anomaly while others make a diagnosis on the basis of glossoptosis and micrognathia with the cleft, whether or not there is respiratory distress.

Further complications in the consideration of isolated cleft palate are two recognized genetic phenomena:

(a) the association of CP with 22q11.2 deletion in the velo-cardio-facial syndrome (VCF); and

(b) X-linked clefting.

The incidence of VCF in many populations is unknown and diagnosis may be delayed, thus affecting the birth prevalence figures. X-linked clefting has been reported in some populations, such as the Icelandic population (Moore et al., 1987), but has not been investigated in many others. Also a study by Lowry and Rennick (1969), X-linked sub-mucous cleft palate that is part of an X-linked recessive trait; this might complicate the picture regarding cleft palate birth prevalence and sex ratio figures.

2.2 Recommendations for producing better descriptive statistics in OFC

2.2.1 Population-based versus hospital-based registries

In much of the older literature and in current work in less-developed countries, data are often available only on births delivered in hospital. Unless almost all births occur in hospital, such data may be biased. However, if hospital confinement is more available to women from the upper socioeconomic groups, hospital-derived rates may underestimate those for the community as a whole. Interpretation of hospital series, therefore, is not straightforward unless the proportion of births in the community delivered in hospital approaches 100%. Even so, when hospital records alone are searched, the number of cases expressed as a percentage of all known cases (found by using multiple sources of ascertainment) may be low, as indicated by the Hungarian figure of 52.5% based on hospital records only (Czeizel and Revesz, 1970).

While complete ascertainment is almost impossible to achieve, we can come close to it by pooling data from several overlapping sources. The quality of a population-based perinatal register will depend on how many sources are used and how thorough the ascertainment process is; also, cleft registers or hospital-based registers tend to be a subset, excluding stillbirths, early deaths, minor anomalies not requiring surgery, patients who move away, miscoding, etc. As well as being less complete, a hospital-based registry will tend to have fewer cases with associated abnormalities because of stillbirths and perinatal deaths (not requiring admission) and because another feature may be more important than the cleft.

2.2.2 Multiple sources of ascertainment

Multiple sources of ascertainment from population-based samples should be used for incidence statistics, and complete censuses or representative samples should be employed for prevalence statistics. These constitute the best approaches available for preparing accurate estimates of rates, because no single data source has sufficient reliability (Czeizel and Tusnadi, 1971).

In preparing incidence data to support genetic and other etiological studies, all aborted fetuses and stillbirths should either be included or appropriate adjustments made. Whether terminations and fetal deaths are included, the inclusion criteria, and the methods used should be clarified. Similarly, the effects of differential prenatal and postnatal death rates on the apparent sex ratios for clefts should be documented. All degrees of cleft expression should be diagnosed to prevent under-ascertainment.

2.2.3 Cleft-type and associated malformations

All epidemiological and genetic data should be presented by specific cleft type whenever possible (Fogh-Andersen, 1942; Fraser, 1970). Each cleft type should be subdivided by the presence or absence of associated congenital malformations (Emanuel et al., 1973). Where possible, syndromic cleft cases should be separated from nonsyndromic ones; and the classification used and how this was done should be explained, for example, by a dysmorphologist. Birth prevalence statistics for clefts will further benefit risk-factor studies if they are tallied separately for familial and sporadic cases (Melnick et al., 1980; Bixler, 1981) in which the genetic and environmental risk factors may differ, and then for syndromic versus nonsyndromic status within these categories. Since the major cleft phenotypes are actually heterogeneous entities, disaggregating them for statistical purposes may aid the investigation of unitary disease categories.

Grouping by ethnic origin is not entirely objective

2.2.4 Ethnic grouping

Where possible, data within countries should be presented by ethnic group, although it must be recognized that grouping by ethnic origin is not entirely objective. Also, in light of some emerging evidence, it may be useful to have a record of socioeconomic status. Ideally, datasets containing core information agreed by consensus should be collected while, for studies in suspected high-risk population subgroups, additional information should be collected, such as specific parental genotypes or phenotypes, older parents, medicated mothers, mothers with certain chronic diseases, and parents with unique dietary or other environmental exposures.

BOX A

Recommendations for producing better descriptive statistics in OFC and epidemiology

Orofacial clefting (OFC) is a heterogeneous group of defects with a considerable range of severity; therefore, there will inevitably be variability in ascertainment rates, and multiple sources of ascertainment should be used where possible. Studies also vary in the criteria used for differentiating syndromic from non-syndromic clefts. Many of the earlier publications were less discriminating on the differences in frequency between CP and CL/P, often quoting a combined figure. Many more recent papers do differentiate and some even subdivide CL and CLP. The validity of inter-centre comparisons is dependent on the comparison of similar groups of patients, and standardized classifications are necessary. Molecular diagnoses will increasingly assist with the differentiation and classification *(see Section 5.2)*

2.3 Conclusions

The overall conclusions to be drawn from the data presented in this chapter are as follows:

- There is ample evidence of the distinctly different nature of CL/P and CP, and emerging evidence of distinct differences in subgroups within these overall conditions.
- There is a great deal of geographical variation, more apparent for CL/P than CP.
- There is apparent variation in the proportion of OFC cases with additional congenital anomalies and syndromes.
- There is no consistent evidence of time trends, nor is there consistent variation by socioeconomic status or seasonality, but these aspects have not been adequately studied. There is a need to investigate such parameters within, as well as between, different populations.
- There is considerable international variation in the frequency of OFCs, but validity and comparability of data are adversely affected by numerous factors, among which are: source population of births considered (hospital versus population), time period, method of ascertainment, inclusion/exclusion criteria and sampling fluctuation.
- There are many parts of the world for which we have little or no information on the frequency of OFCs, in particular parts of Africa, Central Asia, Eastern Europe, India and the Middle East. This needs to be addressed urgently.

3 Possibilities for improving the treatment of CFA

Three interrelated clinical management issues were identified by participants as being priorities for international collaborative research:

- the identification and dissemination of optimal clinical interventions for the management of craniofacial anomalies (evidence-based care);
- the identification and dissemination of strategies to optimize the quality of services that deliver care (quality improvement); and
- the identification and dissemination of strategies to increase the availability of care to all affected citizens of the world (access and availability).

3.1 Evidence-based care

Evidence-based care is considered to be "the integration of best research evidence with clinical expertise and patient values". In respect of therapeutic interventions, the most powerful evidence is derived from systematic reviews that provide a synthesis of relevant randomized controlled trials (Sackett et al., 2000).

However, for CFA care providers there are some challenges ahead. Even for the longest established CFA intervention – the management of cleft lip and palate – the scientific basis of the discipline is weak. Virtually no elements of treatment have been subjected to the rigours of contemporary clinical trial design (Roberts et al., 1991) and there is a bewildering diversity in practices. A recent survey of European cleft services revealed that, in 201 teams, 194 different surgical protocols were followed for unilateral clefts alone (Shaw et al., 2001). Table 4 shows the variation in sequence and number of operations in current use to repair a unilateral cleft in Europe.

Table 4: Sequence of operations for the repair of unilateral complete cleft lip and palate

First operation	Second operation	Third operation	Fourth operation	%
Lip closure	Hard and soft palate closure			42.8
Lip closure	Soft palate closure	Hard palate closure		15.3
Lip and hard palate closure	Soft palate closure			10.4
Lip and soft palate closure	Hard palate closure			10.0
Lip, hard and soft palate closure				5.0
Lip closure	Soft palate closure	Hard palate closure and alveolar bone grafting		3.5
Lip and soft palate closure	Hard palate closure and gingivo-alveoloplasty			2.5
Lip and alveolar closure	Hard and soft palate closure			2.0
Soft palate closure	Lip and hard palate			2.0
Lip adhesion	Lip closure	Soft palate closure	Hard palate closure	1.5
Lip and alveolar closure	Soft palate closure	Hard palate closure		1.0
Lip adhesion	Lip, hard and soft palate closure			1.0
Lip adhesion	Lip and hard palate closure	Soft palate closure		1.0
Hard and soft palate closure and alveoloplasty	Lip closure			0.5
Lip and soft palate closure	Hard palate closure and alveolar bone grafting			0.5
Lip adhesion	Lip closure	Hard and soft palate closure		0.5
Lip closure	Soft palate closure	Gingivo-alveoloplasty	Hard palate closure	0.5
Total				**100.00**

Source: Shaw et al., 2001

Generally speaking, choices in surgical technique, timing and sequencing, and choices in ancillary procedures such as orthopaedics, orthodontics, and speech therapy are arrived at after disappointment in the results of former practices, rather than on the basis of firm evidence that the new protocol has succeeded elsewhere. As a consequence, the unsubstantiated testimony of enthusiasts for a particular treatment has done much to shape current practices. Typically, enthusiastic claims are made for a new type of therapy; the procedure is widely adopted; a flow of favourable anecdotal reports ensues; little or no positive evidence develops to support the desirability of the procedure; there is a sharp drop in the number of clinical reports, again without evidence to support the change (Spriestersbach et al., 1973).

3.1.1 Sources of bias in CFA research

See Box B, facing page.

Not surprisingly then, empirical research frequently demonstrates that in studies of health care interventions without randomization, an inflated view of effectiveness results (Kunz and Oxman, 1998). Thus controlled trials of a series of psychiatric medications found them effective only 25% of the time but, in uncontrolled studies of the same medications, 75% were positive. Even more dramatically, none of a series of randomized trials of portacaval shunt surgery found clear evidence of benefit but 75% of uncontrolled studies did.

3.1.2 The hierarchy of evidence for CFA research

As non-randomized studies make up the great majority of the current literature in CFA treatment they must be appraised with great caution, being appreciated for the contributions to knowledge they can make and also recognized for their inherent limitations. They conform to the following broad hierarchy (Roberts et al., 1991):

- **Anecdotal case reports**: Case reports may signal important new developments in clinical practice, but the evidence they contain for a widespread change in practice remains generally unconvincing in the absence of subsequent rigorous confirmation.
- **Case series**: Reports of a series of cases treated by the same method provide more substantial evidence of the merits of a particular technique or programme of treatment, and provide the professional

BOX B

Sources of bias in CFA research

The general rules of "health technology assessment" are well established and the quality of treatment comparisons conforms to a widely accepted hierarchy, from anecdotal reports to randomized trials and systematic reviews. This hierarchy relates to the degree of effort made to minimize ever-present sources of research bias that readily lead to false conclusions. The following certainly apply to the literature concerning CFA, and make comparisons between reports unreliable:

Susceptibility bias (lack of equivalence between groups of cases): Some patients will inevitably be more susceptible to the treatment applied, because their condition is less severe or because they inherently possess a better prognosis. Thus the apparent effectiveness of any technique, applied to a group of cases that are inherently more amenable to correction, will be inflated if compared to another technique applied to a more challenging group of cases. For example, comparisons of facial growth data may be dubious where there are inherent differences in facial form between communities. Similarly, speech development may be less good in circumstances where the socioeconomic profile of the population served by a particular centre is less favourable, or where the local spoken language calls for different oro-pharyngeal skills.

Proficiency bias: In a similar manner, a more skilled surgeon or clinical team can also inflate the apparent effectiveness of a technique. If operator A is 10% better than operator B, and technique X is 5% better than technique Y, a false conclusion will be reached in a comparison of technique Y performed by A, versus technique X performed by B.

Follow-up bias: The consumer of journal or conference reports needs some reassurance that the "whole story" has been given and that follow-up has been as rigorous for the cases that went badly as for those that went well. Without knowing about all the cases on whom a particular technique was tried, reliable conclusions cannot be drawn.

Exclusion bias: In reporting the effectiveness of an intervention it is often tempting to exclude cases retrospectively, where the expected progress was not achieved. Typical grounds for retrospective exclusion might be lack of compliance on the part of the patient or suspicion that an underlying condition (e.g. an ill-defined "syndrome") has prevented the intervention from working. Irregular application of the rules of retrospective exclusion clearly can remove any equivalence that comparison groups may have had.

Analysis bias: Given the virtual absence of agreed rating schemes for outcome evaluation, reporting in the CFA literature is inevitably inconsistent. And without objectivity in appraisal – as achieved with blinded, independent panels – comparisons must be unsure.

Reporting bias: It would appear that clinical researchers, like pharmaceutical companies, are more likely to report positive findings than negative ones. But not only are findings more likely to be reported if they are positive, but they are also more readily accepted for publication by journals, more readily accepted for conferences, more often published in English, and more often cited in later publications (Easterbrook et al., 1991; Dickersin et al., 1992; Dickersin and Min 1993; Egger et al., 1997; Stern and Simes, 1997).

community with a general impression of relative efficacy. Rather commonly, however, outcome is measured in the short term and the enthusiasm of the reporters may impair true objectivity. Thus primary bone grafting, first heralded as an important breakthrough in case-series reports, was later shown by randomized controlled trials to be harmful to facial growth (Rehrmann et al., 1970; Jolleys and Robertson, 1972). On the other hand, case series of secondary bone grafting using cancellous iliac crest grafts revealed persuasive evidence that one aspect of outcome, the patient's dentition, could be reliably restored beyond levels previously attainable (Boyne and Sands, 1972, 1976; Bergland et al., 1986). The immediacy of these benefits ruled against the need for a randomized trial though potential growth disturbances still deserved consideration (Semb, 1988). Future trials of bone grafting may, however, still be necessary to examine individual aspects of surgical technique or timing, or to test the suitability of alternative graft materials.

Differences arising from biases ... may exceed actual differences attributable to procedures

Case series rarely provide evidence of the superiority of one technique over others where a choice of broadly similar methods exists and in which any improvement may be modest rather than dramatic. This is a major problem in the evaluation of the primary surgical repair of clefts, since this may be achieved with apparently similar success by methods that differ in technique, timing and sequence. Differences arising from the biases listed above are likely to exceed actual differences attributable to the procedures.

- **Non-randomized comparison studies:** Opportunities for non-experimental comparisons of therapies or programmes of care can arise in several ways: by the coexistence of different therapies at the same centre, by the replacement of one therapy with another, or by collaboration of two or more centres. In such comparisons attempts may be made to reduce bias.

  ✧ **Comparison of co-existing therapies:** In using retrospective material, such as case notes or clinical databases, checks can be made on the equivalence of the groups, commonly in terms of gender, age or diagnostic subtype. Preferably, cases can be matched pair-wise on these characteristics, or adjustments can be made in the analysis by stratification or the use of multivariate statistical methods. In either case, however, doubt will remain that important prognostic factors have been masked for, if two or more therapies were being used concurrently within a single centre, selective allocation to treatment may have occurred. For example, decisions as to when (at what age) to perform surgery may be influenced by unrecorded aspects of the condition, the availability of personnel, the health of the child or

parental attitudes and characteristics. Should these factors influence outcome, confounding would occur in any study of the effect of age on surgical outcome.

Even if it is possible to match or adjust data to remove bias due to gender, age or severity, this gives no guarantee that some other prognostic factor that may affect outcome is not associated with choice of treatment. And of course, a critical factor in surgical outcome is the differing proficiency of different surgeons.

✧ **Comparison with historical controls:** These studies may arise as natural experiments by changes in therapy within a treatment centre. Such research is feasible when durable records (radiographs, study casts, speech recordings, photographs, etc.) are obtained in a standardized way for both those subjects treated by an earlier method (the historical controls) and those subjects treated by a subsequent one, allowing simultaneous evaluation. An alternative circumstance in which such studies arise is where data for a group of patients receiving a standard treatment already exists and can be gathered in a similar way when a new treatment is introduced. This design requires only half the number of patients to be gathered prospectively as a randomized clinical trial and is clearly attractive where recruitment of cases is slow. Furthermore, it has been argued that, in circumstances of poor outcome, it may be unethical to withhold new treatment in order to create a control group (Gehan, 1984).

Changes in technique are often a result of changes in personnel with differences in skill

There are nevertheless several biases and possibilities for confounding that generally tend to favour the newly-introduced procedure. In practice, changes in technique at a treatment centre often come about as a result of changes in personnel who may have performed differently in respect of the previous method. This leads to bias due to differences in skill of personnel associated with either treatment method. For example, a new method of treatment is often tested by an experienced and innovative surgeon who may be expected to achieve better results than the average surgeon. This clearly introduces the confounding effect of operator proficiency with treatment. Even where there is stability of staff, bias reflecting gradual changes of ability and technique are highly likely and definition or ascertainment of prognosis may change. New methods may also be initially applied with some selectivity to "suitable" cases as experience is gained. Other aspects of clinical management may have been altered with the intention of improving outcome, creating additional possibilities for bias in favour of the innovative procedure. Multivariate methods have been suggested as a way to adjust for these biases, but serial changes in treatment are likely to take place in parallel, resulting in a strong

association between treatment variables (Semb et al., 1991). This is one reason why historical control design is generally unsuited to evaluating primary cleft surgery since other changes in the total programme of care are likely to have occurred during the extensive recruitment period.

The bias favouring the innovative procedure is a major cause for concern with historical control studies as they may either fail to resolve a controversy or alternatively create ethical concerns that preclude further, more rigorous, comparisons. Favourable outcomes suggested for a new procedure by historical control studies have been disputed by subsequent randomized controlled trials (Pinsky, 1984; Pollock, 1986). Thus, the danger exists that historical control studies could set in motion an unwarranted cycle of change with no benefit to the patient and consequently delay the process of development.

Bias favouring innovative procedures is a major cause for concern with historical control studies

The reduction in recruitment time for a historical control study in which data are gathered prospectively on a new method is also less important when extended follow-up is required of each case. If, for example, the proposed follow-up of a trial of 2 methods of primary surgery is 10 years and the recruitment time of patients sufficient for a randomized trial is 4 years, the total duration would be 14 years. The potential saving of time in a partially prospective, historical control study would only be 2 years (14%).

✧ **Inter-centre comparison***:* The multi-centred approach offers distinct advantages for cleft or CFA treatment centres, as the generation of adequate samples within specific subtypes treated by contrasting treatment modalities is extremely difficult. Prospectively planned recall of cases at participating centres allows data on outcome to be collected in a standardized way, and rigorous planning and execution across the centres can ensure consecutive case recruitment and consistent evaluation (Shaw et al., 1992a,b).

Provided procedures for entry into the study are equivalent in all participating centres, this strategy is extremely valuable in assessing the outcome of surgery, together with other major components of the treatment programme at respective centres. However, for primary cleft surgery it is difficult, if not impossible, to establish the key beneficial or harmful features of a specific treatment due to the invariably complex and arbitrary mix of surgical technique, timing and sequence, ancillary procedures, and surgical personnel (Shaw et al., 1992b). For example, if two centres differ in the use of presurgical orthopaedics and types of primary lip and palate surgery, there is no way to determine which of these procedures might be responsible for any difference in outcome between centres, nor would a null result

allow the conclusion that individual aspects of the treatment programme are equivalent. The method is therefore better suited to comparative clinical audit and quality assurance than definitive clinical research. The existence of significant disparities in outcome of the overall treatment process provides a basis for speculating as to the possible cause, and inter-centre studies should, therefore, be highly motivating towards the generation of specific hypotheses for subsequent trials.

Systematic review of randomized trials is the optimal method of choice

- **Randomized controlled trials**: For the comparison of therapies there is little doubt that the randomized controlled trial is generally the method of choice, scientifically and ethically. Prognostic factors, including clinical proficiency, whether known or unknown to the investigator, tend to be balanced between treatment groups. Since patients are registered prior to treatment and followed up prospectively according to a clearly defined protocol, missing data are less likely as the potential loss to follow-up and late exclusion is reduced. Formalizing the protocol at the outset, as required by an ethical review board or funding agency, increases the likelihood of impartial analysis. The likelihood of reporting the results is also increased but by no means guaranteed.

  Randomized controlled trials can, of course, also be performed badly. Notably, if the randomization procedure is not strictly applied (i.e. if allocation is not fully concealed from the investigators), bias can enter. Inadequate concealment in clinical trials is associated with higher odds ratios, i.e. an inflated view of effectiveness emerges (Moher et al., 1998), as in the case of non-randomized studies. Trials with insufficient cases may also give misleading results.

- **Systematic review of randomized trials:** Systematic review of all relevant randomized trials is the optimal method for establishing whether scientific findings are consistent and can be generalized across populations, settings and treatment variations, or whether findings vary significantly by particular subsets. Explicit methods used in systematic reviews limit bias and improve reliability and accuracy of conclusions (Chalmers and Altman, 1995). Meta-analysis – the use of statistical methods to summarize the results of independent trials – can provide more precise estimates of the effects of health care than those derived from individual studies. The Cochrane Collaboration is an international organization established to prepare, maintain and promote the accessibility of systematic reviews of the effects of health-care interventions and, as randomized trials in CFA are completed and reported, it will become a primary source of reviews and dissemination (www.cochrane.org).

3.1.3 Improving the evidence base for CFA

Given the relative scarcity of CFA, the dispersion of clinical services and the diversity of therapies, the establishment of a sound evidence base seems unlikely, without the development of a strategic international framework.

Early experience with randomized trials in cleft management

Remarkably few randomized trials have been performed in cleft lip and palate surgery

Almost thirty years ago, Spriestersbach et al., (1973) identified the need for prospective research to resolve central problems of cleft management, but remarkably few randomized trials have been performed in cleft lip and palate surgery despite being the surest means of advancing the discipline in the face of overwhelming uncertainty about the relative efficacy of countless different programmes of care around the world. In a review of 25 years of the *Cleft Palate Journal,* only 5 controlled clinical trials were identified, with only 1 involving a follow-up of surgery for more than 4 years (Roberts et al., 1991).

Robertson and Jolleys conducted two small randomized controlled trials of primary surgery in the 1960s. In the first study a sample was randomized in respect of alveolar bone grafting at the time of primary surgery in infancy (Robertson and Jolleys, 1968). Follow-up revealed a detrimental effect on facial growth in the grafted group (Robertson and Jolleys, 1983). The second study involved 2 groups of 20 cases where 1 group's anterior palate closure was delayed until 5-years of age. No benefit for dentofacial growth was found in delaying hard palate closure (Robertson and Jolleys, 1974). A follow-up study when the children were 11 years of age reached the same conclusion (Robertson and Jolleys, 1990). In a quasi-randomized trial (patients entered on basis of birthdates), Wary et al. (1979) found a difference in perioperative morbidity following 3 types of palate repair in 47 patients with a variety of cleft types: V-Y pushback, Langenbeck, Langenbeck with superiorly based pharyngeal flap. Speech outcomes were subsequently reported for 52 patients (Holtman et al.,1984). Morbidity was least with the Langenbeck and speech outcomes were the same in all three. Chowdri et al. (1990) compared rotation-advancement and triangular flaps in unilateral cleft lip repair in 108 cases and found no differences in lip and nose appearance.

In another quasi-randomized controlled trial (patients alternated rather than randomized) on speech outcome, Marsh et al. (1989) compared palate repair with or without intravelar veloplasty in 51 subjects with a broad range of palatal cleft types. Speech evaluations were made at a two-year follow-up. No difference in outcome was detected but the procedure, including intravelar veloplasty, required a significantly longer operating time.

Another randomized controlled trial on speech outcome and maxillary growth in patients with unilateral complete cleft lip and palate operated on at 6 versus 12 months of age was undertaken in Mexico (Ysunza et al., 1998). The study groups consisted of 41 subjects operated on at 12 months of age, and 35 subjects operated on at 6 months. There was no statistically significant difference in velopharyngeal insufficiency, maxillary arch development or soft tissue profile as measured on cephalometric radiographs. However, phonologic development was significantly better in patients operated at six months and none of the patients in this group developed compensatory articulation. The authors concluded that cleft palate repair performed at six months significantly enhances speech outcome and prevents compensatory articulation disorder. The same group compared minimal incision palatopharyngoplasty with and without individualized velopharyngeal surgery for velopharyngial insufficiency in 72 patients with submucous cleft palate, and found no benefit for the more complex procedures (Ysunza et al., 2001).

Most trials have involved relatively small samples

For patients with velopharyngeal insufficiency (VPI), secondary surgery to the pharynx is often recommended. Whitaker et al. (1972) found no difference in outcome in a randomized trial of 35 patients, comparing superiorly- versus inferiorly-based flaps. More recently, pharyngeal flap or sphincter pharyngoplasty were compared in a multi-site randomized controlled trial of 97 patients. Patients were evaluated before surgery, then 3 and 12 months following surgery, by perceptual speech evaluation, video nasopharyngoscopy, nasometry, polysomnographic sleep study, lateral cephalometric radiographs, audiometry and tympanometry. Preliminary analysis has shown both techniques to be equally effective and equally safe (VPI Surgical Trial Group, 2001). A larger replication of this trial is currently under way at the Hospital for Research and Rehabilitation of Craniofacial Anomalies, University of São Paulo, Brazil.

Most of the above trials have involved relatively small samples, but two current surgical trials are taking place on a more ambitious scale. A randomized controlled trial to compare velopharyngeal function for speech outcomes in two groups of patients with complete unilateral cleft lip and palate is also being undertaken at the Hospital for Research and Rehabilitation of Craniofacial Anomalies in Brazil (Williams et al., 1998). The two palatoplasty techniques tested are von Langenbeck with intravelar veloplasty and the Furlow procedure. A total of 608 patients are being entered into 1 of 2 age categories; patients having surgery before 1 year of age and patients undergoing surgery at approximately 1½ years of age. This study is designed to determine which of the two surgical procedures is superior in constructing a velum capable of affecting velopharyngeal competency for the development of normal speech.

Since 1986, North European teams have been developing a concerted programme of multidisciplinary inter-centre research in cleft lip and palate. This includes a comparison of surgical outcome in four Scandinavian centres (Friede et al., 1991; Enemark et al., 1993) and six European centres (Shaw et al., 1992a,b; Mars et al., 1992; Asher-McDade et al., 1992; Mølsted et al., 1992, 1993a,b; Morrant and Shaw, 1996; Grunwell et al., 2000). Following these collaborations, the limitations of inter-centre studies became increasingly obvious to these teams, as it became clear that it would be impossible to separate and compare the single elements of the package of care provided in the different centres. This experience provided a compelling stimulus for starting randomized controlled trials in primary surgery of clefts and 10 centres are currently participating in a set of 3 parallel trials where groups of teams are testing their traditional local protocols against a common protocol. At the time of writing, more than half of the proposed sample of 450 infants with unilateral cleft lip and palate has been entered into this "Scandcleft" trial (Semb, 2001).

The feasability of randomized trials has been demonstrated

Randomized trials of other interventions have also been completed. These include a trial of artificial bone (Ping et al., 2001), a trial of nasal floor augmentation (Chen. et al., 1999), trials of anaesthesia or analgesia (Bremerich et al., 2001; Prabhu et al., 1999; Ahuja et al., 1994; Nicodemus et al., 1991), a trial of perioperative steroid therapy (Senders et al., 1999), a trial of perioperative antibiotics (Anland et al., 1995), speech therapy following velopharyngeal surgery (Pamplona et al., 1999), inclusion of mother in speech therapy (Pamplona et al., 2001), phonologic versus articulatory speech intervention (Pamplona et al., 1999), the use or non-use of presurgical orthopaedics (Kuijpers-Jagtman and Prahl, 1996; Kuijpers-Jagtman and Prahl-Andersen, 1997; Konst et al., 2000; Prahl et al., 2001), the use or non-use of arm splints following surgery (Jigjinni et al., 1993), feeding after surgery (Darzi et al., 1996; Lee et al., 1999), feeding methods in infancy (Brine et al., 1994; Shaw et al., 1999), and the use of continuous airway pressure (CPAP) in the treatment of hypernasality (Kuehn et al., in press), and fluoride supplements for dental caries (Lin and Tsai, 2000).

Such efforts demonstrate the feasibility of randomized controlled trials in the CFA field and indicate the probable shape of future progress. Thus trials of sufficient power are likely to be mounted either through collaboration between funding agencies, clinical scientists, and large, high volume centres (possibly in the developing world, as in the Brazilian trials above). Alternatively, they may be mounted as multi-centre investigations within collaborative groups with strong geographic or cultural links, as in the Scandcleft trial. Each will have a place.

Challenges in mounting clinical trials

Among the challenges in mounting clinical trials concerned with CFA are, firstly, adequate length of follow-up since interventions are often applied at an early stage of life and their full consequences only revealed some years later; secondly, the location of CFA may impair many structures and functions calling for the quantification and weighting of diverse outcomes.

Above all, however, is the challenge of sample size since the various subgroups of CFA occur infrequently. Current estimates suggest that 2 groups of around 75 cases of the same diagnostic subtype are required in trials of cleft surgery. For example, more than 1 million births would have to occur for a trial including 150 infants with complete, non-syndromic, unilateral complete cleft lip and palate (assuming a rate of 1 per 7 of all cleft types, 1 cleft per 700 births, 75% compliance with all inclusion/exclusion criteria, and consent obtained in 90% of cases). On the basis of the actual rate of entry to the Scandcleft trial mentioned above, smaller countries, such as Denmark (population 5.3 million) and Norway (population 4.4 million) would take 8 and 11 years respectively to recruit 150 cases in a single-nation trial, despite a rate of 1 cleft per 500 births.

History indicates that not all surgical innovations are an enduring success

Ethical issues in randomized trials

The ethical issues raised in randomized trials in CFA care are interesting (Berkowitz, 1995; Shaw, 1995), in particular the double standards that are applied in clinical experimentation. History indicates that not all surgical innovations are an enduring success. Discredited, though once fashionable techniques, include gastric freezing for bleeding peptic ulcer, carotid body denervation for bronchial asthma, portacaval shunt to prevent oesophageal variceal bleeding, nephropexy for viceroptosis, removal of chronically inflamed appendix and periarterial sympathectomy (Baum, 1981; Salzman, 1985). Indeed, numerous reports show that new treatments are as likely to be worse, as they are to be better, than existing alternatives (Chalmers, 1997).

Where the doctor leads, however, most patients and parents will follow, raising an important ethical dilemma. If a surgical team wishes to test an innovative procedure in a randomized trial it must obtain ethical approval from an appropriate authority and fully inform each new patient of any uncertainty and/or risk prior to obtaining his/her signed consent. Ironically, if the team wishes to try out the same innovation on all its patients, no such rules currently apply (Chalmers and Lindley, 2000). "Ethical codes that seek to protect patients ... regulate the responsible investigator but not the irresponsible adventurer" (Lantos, 1994). In the United States the National Commission for the Protection of Human

Subjects recommended that "medical committees should be responsible for ensuring that major innovations undergo proper scientific evaluation" and be charged with "determining which new treatments need to be evaluated, the proper method of evaluation and how to limit the use … prior to the completion of that evaluation" (Tonelli et al., 1996). As yet no such body exists, neither in the United States nor elsewhere.

In the light of the above, there exists a strong imperative to mount clinical trials across a range of CFA where true uncertainty of effectiveness (equipoise) exists, and to apply the customary rules for informed consent and ethical approval from appropriate authorities. When trials in a developing country are planned and funded by a developed country, it would offer reassurance if a cooperative or parallel trial were also to be undertaken in the developed country unless, of course, the trial has relevance only for developing countries.

There exists a strong imperative to mount clinical trials across a range of CFA

Planning for surgical trials

See Box C, facing page.

Measuring outcome

The ultimate goal of CFA care is restoration of the patient, as far as possible, to a "normal" life, unhindered by handicap or disability. However, the measurement of normalcy is a highly complex proposition and there is certainly no index at present that would allow sufficiently sensitive comparison between alternative treatment protocols. Clinical trials will focus more on "proximate" outcomes. These will mainly represent different aspects of anatomical form and function in the parts affected by the CFA, often reflecting the particular interests of individual provider groups. In essence, most measures will be an indication of the deficits that persist despite (or as a result of) treatment, such as shortcomings in appearance, speech, sight, hearing and dentofacial development. The general rules of reproducibility and validity apply, the latter being especially important when outcome is assessed before maturity. Longitudinal archives may be useful to determine the reliability of prediction for outcomes that are to be measured in the young (Shaw and Semb, 1996; Atack et al., 1997).

Meaningful ways to document the satisfaction of patients and their families are essential, but present scales are rudimentary and may possess little validity. The development of techniques that have cross-cultural international validity has not begun and will be a significant challenge.

In relation to cleft surgery, experience with a number of outcome measures and scales have been obtained regarding speech, dentofacial outcomes and patient satisfaction (e.g. Kuehn and Moller, 2000; Sell et al., 2001; Williams et al., 2001). Further work is certainly needed to refine these and build

BOX C

Systematic planning for surgical trials

Whereas hypotheses for clinical trials in many disciplines will frequently be generated by laboratory-based studies or a consideration of previously reported cohort studies and clinical trials, this is unlikely to be the case for surgical trials in CFA surgery, at least for some time. Animal studies can shed some light on the general consequences of scars in the palatal mucoperiosteum, for example, but inferences for human maxillary growth are questionable (Kremenak, 1984; Friede, 1998; Leenstra et al., 1999). Furthermore, speech, a key outcome for cleft surgery is a uniquely human behaviour. The opportunity for most surgeons to gain meaningful experience of different techniques is severely constrained by the relative rarity of CFA subtypes, the need for lengthy follow-up, and the lack of robust measures of outcome. Together with the probable biases that apply to the existing CFA literature, research planning may be very idiosyncratic.

In the absence of relevant animal studies and reliable clinical studies a process of informed negotiation would assist in defining promising alternatives in CFA surgery and in achieving the equipoise that must be established if clinicians are to enter ethically-grounded trials. By further negotiation, variations in current practices among potential partners could be harmonized/rationalized to create more manageable aggregations of trialists. One solution would be adoption of a focus group process supported by literature review specialists. Members of the focus groups would be selected on the basis of their knowledge and experience in the field, and their standing; the latter to encourage maximum credibility of the process and foster wide implementation of eventual trial findings. They would also be selected on their likely willingness and ability to enter and/or recruit surgical centres for the eventual trial. Collectively the focus groups should represent a good geographic and multidisciplinary spread.

For different clinical topics such a process would define promising therapies, appropriate outcome measures, randomization schemes, and potential partners to develop cooperatives and funding applications.

consensus upon international standards. Reliable rating of appearance is still problematical and, for speech, linguistic differences represent a significant international challenge. Outcomes should be patient-centred, i.e. measuring things that matter to ordinary people, rather than sophisticated surrogate measurements that may have little relevance to everyday life.

Indeed, measurements of aesthetic and functional outcomes in isolation are not good predictors of emotional (psychological) adjustment and well-being (Robinson, 1997). There is a pressing need to identify the variables

that contribute to the quality of life of affected individuals. Once identified, this knowledge should then be used to develop and refine methods of support and intervention, designed to optimize psychosocial as well as aesthetic and functional outcomes in CFA.

BOX D

Measuring treatment burden

Since the consequences of CFA may be apparent through every phase of childhood and adolescence, there is seldom a time when the disciplines involved in care cannot recommend one or another intervention. The powerful desire of patients and parents to reach the point where the stigma of CFA will be completely eradicated makes it likely that they will accept most proposals and willingly comply with protocols of care recommended by all members of the team, no matter how demanding they may be. They have little choice.

So far, "burden of care" has received little attention in CFA studies, yet the combined total of operations – other treatment episodes, and review appointments for the first 20 years of life, including all the disciplines that may be involved – can be enormous. Apart from pain and suffering and the disruption to family life, employment and school attendance, the dependent role in which this places the patient may have an adverse effect on the patient's sense of self-determination or locus of control.

A particular problem has arisen over the years with supplementary orthodontic interventions such as presurgical orthopaedics, primary dentition orthodontics and maxillary protraction. There is little evidence to suggest that the extra burden imposed on patients and the financial cost of these interventions is justified by any significant benefit (Severens et al., 1998; Long et al., 2001). Thus it is important in clinical trials to accurately record the total number of ancillary interventions and clinical visits in addition to surgical episodes.

Measuring cost-benefit

Economic pressures around the world have forced close examination of the true financial costs of treatment and, with reducing budgets, clinicians must either be involved in cost controls or have arbitrary choices imposed upon them. Surgical operations are invariably expensive treatment episodes and successful initial operations that minimize the need for multiple secondary revisions are highly desirable. Furthermore, successful initial repairs are likely to reduce the duration and complexity of subsequent ancillary procedures.

Work has yet to begin in applying the techniques of health economics to the field of CFA. Health status and the utility of care and associated quality

of life may be estimated using the techniques of time trade-off and conjoint analysis (Torrance, 1976; Ryan et al., 1998; Ryan, 1999).

Economic prioritization models use decision analysis and simulation to assess the resource costs and patient benefits of current treatment patterns and the "cost-effectiveness gap" or potential gain from alternative surgical procedures for CFA. This would include reviews of existing literature, observational and audit databases to determine: the natural history of CFA; the incidence and prevalence of CFA; the possible indications and target populations for surgery; current treatment patterns and relevant comparators; and the costs and benefits of current treatment.

Prospective registries occupy an intermediate position between non-randomized studies and randomized controlled trials

Prospective registries – a preliminary approach for rare and/or novel interventions

During the introductory phase of a new therapy it may be impossible to mount a randomized trial if the intervention is undergoing constant modification and the population it is applied to is heterogeneous and ill-defined. Such is currently the case with many CFA interventions. A case in point in the last decade is distraction osteogenesis (gradual mechanical elongation of a bone) in its increasing application to the craniofacial skeleton.

Pending the conduct of clinical trials, the establishment of prospective registries to enable critical appraisal of different kinds of CFA interventions will maximize collective experience and minimize the biases that inevitably occur with ad hoc reporting. Such registries would therefore play a similar role to Phase I trials of pharmaceutical interventions. One such registry has been set up for distraction osteogenesis in Europe as part of the EUROCRAN programme, with centres submitting duplicate records prior to – as well as after – treatment, as a step to minimizing follow-up, analysis and reporting bias (www.eurocran.net).

As records of all cases would be filed with the registry prior to the start of treatment as well as after it, justification for non-follow-up would be required. And, as in well-conducted clinical trials, analysis bias could be overcome by employing blinded independent raters, while reporting bias could be overcome by the greater impartiality of the partnership and its predetermined conventions. Susceptibility bias and exclusion bias could not be minimized with the assurance derived from random allocation, but some checks of equivalence might be possible. Clinical proficiency, however, would inevitably remain as a major bias. Thus, prospective registries occupy an intermediate position between non-randomized studies and randomized controlled trials.

The registry approach will maximize opportunities for preparatory work on outcome methodology: for early detection of extremely promising or unpromising clinical strategies, for defining answerable questions amenable to clinical trials, and for building the interpersonal trust and institutional partnerships that will be necessary to mount such trials.

3.1.4 Tissue engineering

Tissue engineering offers two generic approaches to assist reconstruction

Surgical advances of a more general, fundamental nature hold promise for improved CFA surgery in the foreseeable future. The discovery that, for example, wounds incurred during early gestation heal perfectly with no scars has led to intensive research of the cellular and molecular differences between scar-free healing and scar-forming healing (Whitby and Ferguson, 1991; Shah et al., 1992, 1996; Ferguson et al., 1996; Cornelissen et al., 2000a, 2000b, 1999a, 1999b). Thus the identification of high levels of TGFβ 3, with low levels of TGFβ 1 and 2, in scar-free wounds has led to the development of pharmaceutical interventions to reduce scarring in experimental skin wounds (e.g. www.renovo-ltd.com). Such interventions are currently undergoing trials in human volunteers and could offer considerable therapeutic benefits in surgery for cleft lip and palate and other CFA.

A major problem in the surgical treatment of CFA is the deficiency of tissue available for surgical repair – bone, muscle, mucosa or specialized dental or eyelid tissues. Tissue engineering offers two generic approaches to assist reconstruction: either to grow cells outside the body, usually harvested from biopsy specimens, or to apply some form of scaffold to orientate the repair potential of the patient's own cells *in situ*. Both approaches can be combined and it is now recognized that many of the cells participating in repair processes are stem cells, derived principally from bone marrow.

Sophisticated scaffolds can be custom-made for the individual patient by defining the anatomical defect through three-dimensional reconstruction of CAT scan and MRI images and linkage to a prototyping or milling machine to manufacture a scaffold for the precise defect. Even the most delicate microsurgery is unable to accurately restore the muscle deficiencies of clefts of the lip and palate, but there is the prospect of encouraging muscle growth along a template of the body's own proteins or a bio-degradable polymer. Signalling by growth-factor release will enhance migration.

Biomaterial science offers a potential solution for certain mechanical problems in CFA. Bone distraction techniques are effective in inducing bone formation and may be combined with osseointegration devices to allow longer-term movements of hard tissues. Detailed knowledge of

internal stress analysis can be combined with cellular reactions to force-mechanotransduction to provide information to direct growth and tissue movement.

The establishment of experienced clinical trial cooperatives will be essential to the safe, efficient and critical translation of these technologies into common practice.

3.1.5 Research on treatment

BOX E

Priorities for research on treatment

There is an urgent need for the creation of collaborative groups in order to assemble a critical mass of expertise and to sufficiently access large samples of patients for adequately-powered clinical trials.

Given the currently poor state of evidence for virtually all aspects of clinical management, there is an almost unlimited list of trials that could be initiated. However, the following were considered to be especially important:

- trials of surgical methods for the repair of different orofacial cleft subtypes, not just unilateral clefts;
- trials of surgical methods for the correction of velopharyngeal insufficiency;
- trials of the use of prophylactic ventilation tubes (grommets) for middle-ear disease in patients with cleft palate;
- trials of adjunctive procedures in cleft care, especially those that place an increased burden on the patient, family or medical services, such as presurgical orthopaedics, primary dentition orthodontics and maxillary protraction;
- trials of methods for management of perioperature pain, swelling and infection; and nursing;
- trials of methods to optimize feeding before and after surgery;
- trials addressing the special circumstances of care in the developing world in respect of surgical, anaesthetic and nursing care;
- trials of different modalities of speech therapy, orthondontic treatment and counselling.

Equally urgent is the need to create collaborative groups, or improve the networking of existing groups, in order to develop and standardize outcome measures; there is an especially urgent need for work on psychological and quality of life measures, and economic outcomes.

For rarer interventions, prospective registries should be established to hasten collaborative monitoring and critical appraisal, equivalent to Phase I trials. Relevant topics would be craniosynostosis surgery, ear reconstruction, distraction osteogenesis for hemifacial macrosomia and other skeletal variations, midface surgery in craniofacial dysostosis, and correction of hypertelorism.

3.2 Quality improvement

Previous research demonstrates that similar interventions achieve widely different outcomes dependent upon the manner and circumstances in which care is provided. For example, secondary complications have been found to occur up to 10 times more frequently when the care of children with unilateral cleft lip and palate is performed inexpertly or delivered in an uncoordinated manner (Bearn et al., 2001). It is evident, too, that simple care can achieve equivalent or superior outcomes to complex care at less human and economic cost (Shaw et al., 1992b; Severens et al., 1998).

The exploration of methods to define attainable standards of care for CFA and to promote quality-improvement protocols among the providers of care was considered to be an important priority.

3.2.1 Organization of services

Delegates discussed the programme of quality-improvement activity conducted under the auspices of the European Commission between 1996-2000 (Shaw et al., 2001). This activity revealed great variability between countries in the provision of medical services for individuals with cleft lip and/or palate. While long-standing high-volume centres of expertise prevailed in Scandinavia, countries such as Italy, Germany, Switzerland and (until recently) the United Kingdom, provided cleft care via large numbers of local services with small case-loads. In other countries, such as Greece, Portugal and Spain, the concept of comprehensive specialist-team care was still undeveloped.

The challenge of improving services in a pan-European manner was addressed in part by the consensual development of clinical and organizational guidelines. The difficulties observed in configuring services into specialized units with sufficient case-loads to foster proficiency of care and secure adequate resources for comprehensive care were by no means solely economic. Instead, the obstacles were frequently reported to be:

- personal egotism of individuals unwilling to discontinue the practice of treating a few children each year;
- competition between specialities for pre-eminence in the field e.g. plastic versus maxillofacial versus paediatric versus ear, nose and throat (ENT) surgery;
- local pride, with every hospital, town or region desiring its own small team;
- lack of clinical leadership; lack of responsiveness of the health authorities at local and national level.

It was also noted that all the above problems had confronted the United Kingdom in the recent past and were not resolved until a national review was instigated by a government body (Sandy et al., 2001). The review included a national survey that revealed that Britain's fragmented, decentralized services were achieving a low standard of clinical success. As a result the government instructed regions to provide care from a single regional centre, with a fully comprehensive specialist team – typically with two to three surgeons – each responsible for not less than 40-50 new personal cases requiring primary surgery per year. In this instance, government intervention was essential to the improvement of services when voluntary methods failed (Sandy et al., 2001).

There is great variability between countries in the provision of medical services

Elsewhere in Europe it was noted that the consensual guidelines on policies, practice guidelines and record-keeping had also been a powerful force in promoting reorganization of services for orofacial clefts, suggesting the influence of peer pressure at a national level. Thus within months of the publication of the European guidelines, more than half the countries in Europe had reconfigured services, formed new multidisciplinary collaborative associations, or increased funding for clinical services (Shaw et al., 2001).

3.2.2 International recommendations

BOX F

International recommendations on organization of cleft lip and palate services

Delegates discussed the desirability of global recommendations on the principles that should govern clinical services for clefts of the lip and/or palate, and concerning basic clinical record collection. It was concluded that such guidelines would improve clinical research capability, and also encourage improved clinical care. There was special recognition of the economic constraints that would be faced by developing countries in complying with generic guidelines, but it was felt that these were still desirable to serve as a long-term goal.

In particular, a set of guidelines recently developed through international consensus in Europe was reviewed. Delegates felt that these were appropriate as a basic requirement for wider international use and that the protocols recommended for clinical record collection were also acceptable as a minimum requirement. The recommendations of the WHO consensus conference are set out in Section 8.

The rationale for recommending case-loads of 40 or more cases per operator is largely one of statistical imperatives: comparative clinical audit and research require adequate samples of cases with a similar prognosis. Clefts of the lip and palate present with great heterogeneity, and the only

substantial category that is reasonably homogeneous is non-syndromic unilateral cleft of the lip and palate (UCLP). Even this group has considerable between-case variation, and reasonably large samples are required for statistical comparison. The Eurocleft Report (Shaw et al., 1992a) provided estimates of the sample sizes required to detect differences for a variety of outcomes. The Goslon Score, a rating of dental arch relationship (Mars et al., 1987) was found to require the lowest sample size for discerning differences among groups. One half point on the Goslon scale was the extent of the differences between the top- and middle-ranked centres and between the middle- and bottom-ranked centres in the Eurocleft study, equating to a 20% difference in osteotomy rate among such centres. At 5% probability and 80% power, detection of a 0.5 Goslon scale point difference in 10-year olds requires samples of the following size:

- 42 UCLP cases required in a 2-group comparison;
- 63 required in a 5-group comparison with 1 standard; and
- 77 required in a 6-group mutual comparison.

Based on an occurrence of one non-syndromic complete unilateral cleft of the lip and palate, per six clefts of all types, Table 5 (below) shows the time it would take for surgeons, with a differing annual volume of cleft work, to generate varying samples.

Table 5: Years required for the generation of samples of UCLP, related to case-load

Surgeon volume	Years to accrue sample for comparison		
	2-group comparison (n = 42)	5-group versus standard (n = 63)	6-group mutual comparison (n = 77)
6 cases per year	42	63	77
30 cases per year	8	12	15
60 cases per year	4	6	7.5

Source: Bearn et al., 2001

Even if follow-up is restricted to 5 rather than 10 years or more, it is clear that only operators treating 60 new cases per year would be able to audit their outcome within a decade. In the case of the United Kingdom, the figure of 40 cases per year (requiring approximately 12 years for an audit cycle) was the compromise reached.

3.2.3 Monitoring outcomes

Participants agreed upon the desirability of establishing international standards, such as the development of rating methodology and sample-size estimates for comparison studies in the procedures of outcome evaluation, a process that also has a research dimension. Currently two general approaches were identified:

Only operators treating 60 new cases per year could audit their outcome within a decade

- **Inter-centre comparisons:** These might take the form of blinded comparison of records of consecutive cases from different centres, a number of which have been reported *(see Section 3.1.2)*. Alternatively, one set of records may be compiled to serve as a standard reference archive against which any team could compare its outcomes. A "good practice" archive of this kind might include durable records such as study casts, radiographs, speech tapes and so forth that would be representative of the ethnic population treated by well established teams with consistent protocols. Other teams could measure their own outcome records against these. In time a series of such archives for clefts and other CFA from different regions could become a web-based resource. The development of such an archive for Europe is included in the EUROCRAN programme *(see Annex 2)*.

  In either case the recommended timetable for record collection would be helpful to maximize the opportunity for teams to successfully match their records to those from other centres *(see Annex 5)*.

- **Registries:** Under the auspices of the American Cleft Palate-Craniofacial Association, a web-based "Craniofacial Outcomes Registry" (COR) was recently established, enabling North American teams to anonymously enter diagnostic and outcome data. Teams rate their own outcomes and can obtain an indication of their relative success compared with the Registry's aggregated data (www.cfregistry.org).

  A national registry for the Cranofacial Anomalies Network in the United Kingdom has also been established and is developing protocols for standardized outcome data collection (www.perinatal.org.uk/crane).

  The Swedish Cleft Palate Association also has a web-based registry (Swedish National Quality Registry for Cleft Lip and Palate Treatment, http://natqa.uas.se/LKGreg/LKGreg.ihtml). It is intended that teams will display the actual records of consecutive cases, allowing peer review by each other.

Participants in the meeting considered that joint, international work, in an effort to harmonize these differing approaches, was urgently required.

3.3 Access and availability

The meeting's attention was drawn to the fact that, by the early 1960s, most industrialized countries had gained control of diseases caused by infection and/or malnutrition, and genetic disorders and birth defects had attained public health significance (Christianson, 2001). This situation is considered to occur when the infant mortality rate (IMR) falls below 40-50/1000 live births, at which juncture countries tend to recognize the need for medical genetic services. Approximately 40 years later, a significant proportion of the world's developing nations has attained a similar situation: in 1997, 75 (53%) of the developing world's countries, in which 60% of their population resided, had an IMR of less than 50 per 1000 live births.

For the majority of CFA-affected individuals, there is a full life expectancy

Only a minority of CFA are lethal and, for the majority of affected individuals, there is a full life expectancy. Appearance, function and social integration can, in nearly all cases, be improved by surgery and related multidisciplinary specialist medical care. The cost of treatment through infancy, childhood and beyond can be considerable however and, in the developing world, often unaffordable.

For example, in 1994, the medical costs of one individual with cleft lip/palate in the United States was estimated at US$ 101 000 (Waitzman, 1994). In the United Kingdom, the estimated cost of 1 regional multidisciplinary cleft lip and palate service, receiving 140 new cases annually, is UK£ 6.4 million per year, excluding capital costs (National Health Service, United Kingdom, 2001). The social costs of unmet or partially-met medical needs are also enormous. Affected individuals are liable to suffer stigmatization, social exclusion and barriers to employment.

When malnutrition and communicable diseases represent more pressing priorities, CFA care provided by nongovernmental organizations (NGOs), through charitable missions of medical staff or the external sponsorship of local providers, may be the only chance of treatment many individuals will have. Such efforts are known to be taking place on a remarkably large scale and in a wide variety of ways. Because of the distinctive features of these services it was considered that particular research questions need to be addressed in order to maximize the benefit of NGO endeavours in CFA. For example, in developing countries, patients often present for surgery at later ages than in developed countries, the services themselves may be of a rudimentary nature, and patients may be seen only once. Thus, a sound evidence base is needed to maximize effectiveness, safety and capacity. Again, quality-improvement strategies should be considered alongside this.

3.3.1 Main approaches

Three main approaches to the provision of specialist care in the developing world were noted. The first was the establishment of efficiently run, high volume, indigenous centres of excellence, capable of serving large and widespread populations via a mixture of assisted travelling arrangements and outreach satellites. An example of such a centre that had achieved considerable success, both in providing service and conducting research, was presented (www.centrinho.usp.br).

Secondly, some NGOs assist large numbers of individuals to receive surgery by providing financial support for indigenous clinical units to undertake operations that could not otherwise be afforded. Support for training indigenous specialists may also be provided (e.g. www.smiletrain.org).

Agencies ... should be encouraged to develop and adhere to a common international code of practice

Thirdly, a large number of NGOs provide care by forming surgical missions where teams of surgeons and ancillary staff make visits to selected sites where there is a shortage of resources or experienced personnel (e.g. www.operationsmile.org; www.rotaplast.org). In several instances valuable research, especially of a genetic or epidemiological nature, has been conducted alongside these ventures (Lidral AC et al., 1997; Murray JC et al., 1997).

Ethical issues are a prominent concern in this work and some programmes have been criticized on grounds of safety, surgical competence and absence of follow-up. Though not a research issue *per se*, it was felt that the present research programme taking place under WHO auspices should attempt to encourage agencies involved in the charitable provision of treatment in the developing world to develop and adhere to a common international code of practice. Such an effort might build upon the survey undertaken by an earlier international task force on volunteer cleft missions (Yeow et al., 1997).

3.3.2 Further work

Participants identified several areas deserving further work:

- a survey of the charitable organizations involved and the scale of their work;
- an appraisal of the cost-effectiveness and clinical effectiveness of the different models of aid;
- the promotion of dialogue between different NGOs to develop commonly-agreed codes of practice and adoption of the most appropriate forms of aid for local circumstances, with an emphasis on support that favours indigenous long-term solutions;

- the initiation of clinical trials concerning the specifics of surgery in a developing country setting: one-stage operations, optimal late primary surgery, anaesthesia protocols (e.g. local anaesthetic, inhalation sedation, antisepsis);
- the development of common core protocols for genetic, epidemiological and nutritional studies alongside surgery.

3.4 Regional perspectives

The membership of the meeting was not intended to be fully representative of all nations. Several general observations, however, are possible, based upon the information presented.

A regional "good practice" reference archive for sub-Saharan Africa would be valuable

Africa: In sub-Saharan Africa clinical resources for CFA are scarce as a consequence of prevailing economic problems and the greater challenge of communicable diseases, particularly AIDS. For example, in Namibia despite a high reported incidence, there are no cleft surgeons. As the wealthiest sub-Saharan country, South Africa has around 12 centres that undertake cleft surgery but these tend to work independently without common quality-improvement protocols. There has, as yet, been little formal study of CFA in the African population of sub-Saharan Africa and a regional "good practice" reference archive for this region would be valuable.

There are a number of centres in the cities of Northern Africa but, as elsewhere in Africa, a survey has yet to be undertaken to identify potential sites with capability for collaborative research.

Australia and New Zealand: There are well-developed services in many cities, though in some instances, the case-load is quite low, limiting the potential for collaborative research. However, the establishment of the Australian and New Zealand Craniofacial Association makes coordination possible and one centre has a programme of support and development for Indonesian and Malaysian cleft centres.

China: In China there is reportedly a high level of unmet need for cleft and other CFA treatment. There is, however, a network of several large surgical centres that could form a potential research partnership.

Treatment, however, is not free and follow-up is difficult. Speech therapists are especially scarce. Of those individuals receiving cleft surgery, only 30% are operated in the first year of life. Again this points to a need for surgical trials to define preferred operative techniques in more mature patients. A survey of clinical services and potential collaborating sites would be valuable, as would development of a quality-improvement strategy and "good practice" archive.

Europe: European clinical services have recently been surveyed (Shaw et al., 2001). In the main, Europe's problems arise from fragmentation of care over numerous small centres. The adoption of consensus recommendations, however, has begun to bring about restructuring, at least for cleft services. Several international research collaborations are under way *(see Annex 1)* and, under the EUROCRAN programme that was initiated in 2001, the European Commission is funding a series of multinational work packages that would be capable of wider networking *(see Annex 2)*.

Indian subcontinent: As yet the subcontinent has not been surveyed regarding CFA or cleft services and research capability. However, an overview of India was presented and may be reasonably representative of adjoining countries. There are high levels of unmet needs and access is complicated as the majority of the population live in rural communities. There are several hundred surgeons trained in cleft surgery and several large university hospitals but, as yet, no quality-improvement protocols are in place. The subcontinent undoubtedly has numerous potential partners for clinical trials though resourcing follow-up studies will be a challenge.

The Indian subcontinent has numerous potential partners for clinical trials

Latin America and the Caribbean: As yet no survey has been done on clinical services and research capability across the continent. Mexico was represented and has at least one large centre that has successfully completed clinical trials (Ysunza et al., 1998, 2001; Pamplona et al., 2001), and is recognized as a centre of excellence in the region. Brazil was also represented by the centre of excellence at Bauru. Elsewhere in Latin America there is undoubtedly a high level of unmet need.

Sout-East Asia: Singapore has already embarked upon a surgical trial in collaboration with a large centre of excellence in Taipei (www.nncf.org; www.cgmh.org.tw) and together they have a high research capability. In Indonesia there are high levels of unmet need but around six cleft teams are established and would be potential sites for research collaboration. Already both Indonesia and Malaysia are engaged in epidemiological, nutritional and genetic research with agencies in Australia, Europe, Singapore and elsewhere. There are reportedly high local incidences of CFA, such as frontal encephalocele, that may be fruitful targets for multidisciplinary research.

Like Europe, Japan may have a fragmentation of services in small centres; however, the Japanese Cleft Palate Association has begun discussions on inter-centre studies and clinical trials. In Korea, several high-volume centres are potential sites for collaborative research and the Korean Cleft Palate Association has begun discussion on inter-centre studies.

Middle East: A high level of unmet need has been reported with few established CFA centres. A number of university hospitals in the region would be potential partners in research.

North America: North America also suffers from a fragmentation of cleft and craniofacial services, and representatives from there spoke of the difficulties of obtaining sufficient subjects for clinical trials because of the decentralized nature of services. The recent emergence of health management organizations was seen as a particular force for the fragmentation of services and dissipation of established cleft teams. None the less, the Childhood Cancer Study Group has achieved a high level of coverage in the United States, as a result of which a high proportion of affected children are enrolled in trials (Ross et al., 1996; Shocat et al., 2001).

The American Cleft Palate-Craniofacial Association has promoted adequate team care and has published several sets of guidelines, as well as initiating the Craniofacial Outcomes Registry.

4 Role of environment in CFA

4.1 Socioeconomic status and orofacial clefts

The investigation of the relationship between socioeconomic status and the prevalence of various health outcomes has provided important clues as to etiology. For example, the observation of an increasing risk of neural tube defects with decreasing socioeconomic status was one of the clues to a dietary hypothesis for these defects (Elwood and Colquhoun, 1992).

Little attempt has been made to investigate whether the risk of orofacial clefts varies by socioeconomic status. Womersley and Stone (1987) examined the prevalence at birth of orofacial clefts within Greater Glasgow (Scotland) during the period 1974-1985, according to housing and employment characteristics recorded in the 1981 census. The highest rates were observed in areas with high proportions of local authority housing with young families, high unemployment and a preponderance of unskilled workers, whereas the lowest rates were found in affluent areas with high proportions of professional and non-manual workers in large owner-occupied or high-quality housing. Most of this pattern was accounted for by CP, with less variation in CL/P.

A variety of different indicators of socioeconomic status have been developed (Liberatos et al., 1988). In an international context, it seems appropriate to use one that is specific to the local area, and one that can be compared between countries, e.g. years of schooling. As socioeconomic status can be difficult to determine at the level of the individual, especially for women, there has been increasing interest in developing, and using, area-based measures of material deprivation as a proxy for socioeconomic status (Townsend,1987; Carstairs and Morris, 1990).

4.1.1 Orofacial clefting, socioeconomic status, nutrition and dietary supplements

Socioeconomic status may have a number of associated variables contributing to the explanation, such as nutrition, smoking, alcohol, illnesses and infections. These factors tend to have been studied retrospectively in some parts of the world and such studies are now being carried out prospectively in Denmark and Norway with regard to reproductive outcome. Other aspects of nutrition not well studied are the effects of obesity/starvation and it may be useful in future studies to record height and weight to get a measure of body mass index in relation to orofacial clefts.

4.1.2 Conclusions

The evidence for prevalence of OFC being greater in the lower socioeconomic classes remains equivocal, the less well-developed countries having a greater proportion of the population in the lower socioeconomic classes.

The overall conclusion is that socioeconomic status and OFC are not well studied. One of the barriers to investigation of the role of socioeconomic status in orofacial clefting is that common criteria for the description of low socioeconomic status do not exist and, in those studies where socioeconomic status or social class have been examined, different criteria have been used, thus making valid inter-centre comparisons impossible.

4.2 Nutrition and orofacial clefts: general issues

There is considerable interest in the effects of maternal nutrition, during the peri-conceptional period, on the occurrence of several types of congenital anomalies. This interest has been stimulated by the finding in a randomized controlled trial that maternal peri-conceptional folic acid supplementation reduces the recurrence risk of neural tube defects (MRC Vitamin Study Research Group, 1991). The role of maternal peri-conceptional vitamin status is now being debated in relation to:

- orofacial clefts (Tolarova and Harris, 1995; Shaw et al., 1995a; Czeizel, 1996; Hayes et al., 1996);
- limb defects (Shaw et al., 1995b);
- conotruncal heart defects (Shaw et al., 1995b; Botto et al., 1996; Scanlon et al., 1998);
- and urinary tract malformations (Li et al., 1995; Czeizel, 1996).

4.2.1 Variation in diet

BOX G

Worldwide variation in diet

Dietary patterns vary greatly between different parts of the world. In rural areas of developing countries, diets may depend solely on what a family or local community produces. As the use of cash is extended, a greater variety of foods becomes available in local markets or shops. In economically developed societies and in urban areas in developing countries, diets are influenced not only by food supplies grown and processed locally but also by those available nationally and internationally (World Cancer Research Fund, 1997).

The diets typically consumed in rural parts of Africa, Asia, Latin America and Oceania often rely on one or two staple cereal foods. In China, India and other low-income countries of Asia, cereals tend to be dominant. Rice dominates in Asia, wheat in North Africa, maize in Latin America, and maize and starchy roots in sub-Saharan Africa (World Cancer Research Fund, 1997).

As countries develop economically, consumption of the dominant staple cereal foods declines. There is a fall in the overall consumption of foods of plant origin and replacement with increasing amounts of foods of animal origin, notably meat, meat products and dairy products. Sugar consumption also tends to increase. Compared with the diets of less developed societies, such diets are lower in fibre and other bioactive compounds found in foods of plant origin. An ever-increasing proportion of food in industrialized societies is processed (World Cancer Research Fund, 1997).

Within some of the most economically-developed countries, this process has slowed and, for some population subgroups, has reversed. For example, in some northern European countries and within North America, there is a trend towards increasing consumption of vegetables and fruits, and decreasing consumption of red meat, fat, full-fat milk, other dairy products and sugar in the form of sucrose (World Cancer Research Fund, 1997).

4.2.2 Diet in pregnancy

During the 40 weeks of pregnancy, an average 12.5-15.0 kilograms are gained (Lederman, 1991). This may be lower in populations with chronic food shortage, or when weight-gain limitation is recommended, as was the case in the United States in the 1960s. In view of the weight gain during pregnancy, an increased food intake would be expected. There have been few studies of intake changes during pregnancy in the same women. The available studies suggest some increased intake in mid-gestation (Lederman, 1991; Brown and Kahn, 1997) but the relationship of this to

intake prior to pregnancy, or around the time of conception, is unclear. In a study of about 550 women in Minnesota (United States) recruited prior to pregnancy and followed at monthly intervals until 6-8 weeks postpartum, the peak increase in total energy intake, and peak decrease in energy expenditure, occurred within the first nine weeks of pregnancy (Brown and Kahn, 1997). Postpartum energy intake declined and energy expenditure increased.

About 50% of pregnant women experience nausea or vomiting during early pregnancy (Kullander and Kallen, 1976; Klebanoff et al., 1985). It appears that women experiencing nausea and vomiting tend to cut down or stop their consumption of alcohol, coffee, tea and other potentially harmful beverages, and also stop smoking (Hook, 1976; Golding, 1986), but the effects on maternal diet appear to have been little documented. It has been suggested that elevated estrogen levels early in pregnancy are the main cause of vomiting, but the evidence is inconclusive (Zhang and Cai, 1991).

Assessment of dietary intake is problematic

4.2.3 Biochemical markers and gene/nutrient interaction

Assessment of dietary intake is problematic. The most established method in nutritional epidemiological investigation of chronic diseases is the food frequency questionnaire (FFQ) in which the primary aim is to obtain a relative ranking of subjects in terms of their reported intake, rather than to determine their absolute intake. Misclassification is recognized as a major problem.

In addition to food frequency data, it is also useful therefore to have biochemical markers of nutrition but, because metabolism is under genetic control, these measures are not the same but complementary. One promising area for future research in the influence of socioeconomic status and nutrition in OFC is the examination of genetic polymorphisms which effect nutrient metabolism, e.g. MTHFR and folate receptors, with study designs aimed to examine gene/environment interaction. While these hypotheses are generated on the basis of biological plausibility, there might well be gene/environment interactions with no apparent biological plausibility, such as reports of interaction between TGFα (transforming growth factor) and multivitamins, and TGFα and smoking. In developing countries there is a need to design FFQs and collect data on nutrition in close consultation with the local indigenous people. There may be a tendency for FFQs to exclude important groups of food that are being consumed. It is also important to realize that people eat foods and not nutrients – which makes it challenging to identify the effects of specific nutrients.

4.2.4 Conclusions

In planning or appraising a study of nutritional epidemiology, in addition to the usual considerations of bias, confounding and chance, important criteria are:

(1) use of a validated dietary instrument that estimates total energy intake;

(2) appropriate adjustment for total energy intake in statistical analysis;

(3) whether any biological markers used are appropriate for the hypotheses under test, and the possible effect of their use on participation rates.

The importance of multi-centre collaborative efforts in looking at diet and nutrition is the broad range of exposure that will reduce the impact of misclassification. However, it is recognized that this is also likely to introduce more heterogeneity.

4.3 Folic acid: nutritional biochemistry and orofacial clefts

4.3.1 Folic acid in reproduction

The terms "folic acid" and "folate" both refer to the same vitamin, whereby folate is the polyglutamate natural form and folic acid is the monoglutamate synthetic form. Adequate maternal folate status is crucial to all stages of pregnancy from conception to delivery. Folate nutrition seems to have a dual role in determining pregnancy outcome. One of these is the long-established role in fetal maturation that may place a requirement for supplementation to prevent maternal anaemia in late pregnancy (Scott and Weir, 1998). The other is the newly-perceived role in the prevention of congenital defects during early embryonic development.

4.3.2 Maternal folic acid deficiency

Peri-conceptional folic acid supplementation can prevent the majority of neural tube defects (NTDs) (MRC Vitamin study, 1991; Czeizel and Dudas, 1992). The mechanism does not seem to be a correction of maternal clinical folate deficiency (Kirke et al., 1993). Nevertheless, there is a strong inverse relationship between a mother's early-pregnancy red cell folate concentration and her risk of having an NTD-affected birth (Daly et al., 1995). This, along with other genetic and environmental evidence, indicates that a complex interaction of folate-related nutritional and genetic influences underlie the etiology of NTDs. The evidence of folate

involvement with other congenital defects is not as strong, but is nevertheless encouraging (Finnell et al., 1998). Early trials using vitamin supplementation to reduce recurrence of orofacial clefting were inconclusive. Many of these studies were small, non-randomized and the treatment preparation was a multivitamin containing folic acid. Other evidence suggesting a link between folate and orofacial clefts included positive associations between clefts and (a) maternal use of anticonvulsants and other known folate antagonists, or (b) maternal cigarette and alcohol abuse (both of which interfere with folate status). In addition, some animal studies showed that feeding folate-deficient diets or administration of antifolate drugs to pregnant rats could induce craniofacial abnormalities in rat embryos. It has been suggested that maternal folic acid supplementation plays a role in the prevention of non-syndromic orofacial clefts, i.e., cleft lip with or without cleft palate (CL/P). Using a case-control design, Wong et al. (1999) investigated vitamin-dependent homocysteine metabolism in 35 mothers with non-syndromic orofacial cleft offspring and 56 control mothers with non-malformed offspring. A standardized oral methionine-loading test was performed, in which fasting and afterload plasma total homocysteine, serum and red-cell folate, serum vitamin B12 and whole-blood vitamin B6 levels were determined. The test showed that both fasting ($p < 0.01$), as well as afterload ($p < 0.05$) homocysteine concentrations, were significantly higher in cases compared to controls.

Early trials using vitamin supplementation to reduce recurrence of orofacial clefting were inconclusive

Hyperhomocysteinemia, defined by a fasting and/or afterload homocysteine concentration above the 97.5th percentile, was present in 15.6% of the cases and in 3.6% of controls (odds ratio (OR) 5:3, confidence interval (CI) 1.1 to 24.2). The median concentrations of serum ($p < 0.01$) and red-cell ($p < 0.05$) folate were significantly higher, and vitamin B6 concentrations appeared to be significantly lower ($p < 0.05$) in cases compared with controls. No significant difference was observed between groups for vitamin B12. These preliminary data offer evidence that maternal hyperhomocysteinemia may be a risk factor for having non-syndromic orofacial cleft offspring. In a more recent study among Irish orofacial cleft cases an increased prevalence of a genetic variant of a folate-related enzyme, previously shown to cause increased risk of NTDs, was found (Mills, 1999; Shields et al., 1999). Homozygosity for this common polymorphism occurs in between 5 to 25% of populations worldwide. The variant phenotype expresses reduced enzyme activity and adversely affects folate status (Molloy et al., 1997). This study recognizes the possibility of population differences in genetic susceptibility, and the need for research on gene/environment interaction.

4.3.3 Folic acid metabolism

It would clearly be unethical at this point to conduct a randomized placebo-controlled trial of folic acid and clefts, given the proven benefit of folic acid in preventing NTDs. Thus the identification of a role for folate or indeed other nutrients will have to be pursued by other means. In other words, it will be necessary to study genetic, nutritional or environmental markers of risk. A randomized controlled trial of different doses would be theoretically possible; there are questions with regard to ethics in study design which are discussed in more detail in Section 7.4 below. From a mechanistic point of view there are good reasons why aberrations in folate metabolism might cause congenital abnormalities. Within the cell, the overall function of the folate co-factors is to accept 1-carbon units from several sources and donate them to other molecules in a variety of enzyme reactions. These 1-carbon units are required for the production of purines and pyrimidines for DNA synthesis and to maintain a supply of methyl groups for the methylation of DNA, proteins, neurotransmitters, etc. (Scott and Weir, 1998). Early embryonic development requires extensive DNA synthesis. An adequate capacity to methylate DNA is crucial in the control of gene expression and thus would be an essential component of cell differentiation and development. Thus, genetic variations in folate-related enzymes, altered nutrition or environmental factors influencing folate status could all be considered to be potential risk factors for congenital malformations and candidates for research into the underlying causes of craniofacial anomalies.

4.3.4 Etiologic heterogeneity in OFC

There are, however, several difficulties associated with this approach. The first of these is etiologic heterogeneity of orofacial clefts, apart from the 20% or so that are syndromic due to specific mutations. It is quite possible that a specific fraction of orofacial clefts are related to folic acid or other multivitamins, but these are submerged under a sea of non folate-related defects. Some of these etiologies may be responsive to folate or other nutrients, others may not, making it difficult to find positive effects. Secondly, any potential genetic or biochemical markers of moderate risk may be difficult to detect unless the majority of syndromic cases can be ascertained and excluded from study sets. Thirdly, it will be important to have the capability of monitoring the nutritional or biochemical biomarkers that may be affected by new polymorphisms which are discovered in candidate genes. This means that a system involving collection of blood and perhaps immortalized cells should be set in place for future analyses. However, the logistics of such an undertaking would need to be carefully considered so that the task is comprehensive enough

to be effective without breaking the back of an entire research endeavour. Finally, while conclusive evidence exists for a specific protective role of folate in prevention of NTDs, this is not the case for orofacial clefts. The present indications of nutrient protection are derived from multivitamin preparations and not just folate.

4.3.5 Research strategy to deal with data gaps

In terms of approaches one could take to improve our level of evidence, there are many problems in carrying out good controlled studies to look at the role of folate and one of the biggest obstacles to progress is the heterogeneity of the study population. To minimize the problem in identifying folate-related defects, it will be essential to carefully categorize samples by type of defect, to identify (and exclude) syndromic cases where possible, and to control methodologic and demographic parameters which might confound biochemical and genetic analyses. In terms of identifying factors that influence folate status, genetic influences might play a major role. This was highlighted in a study of mono- and di-zygotic twins (Mitchell, 1997) that suggested that as much as 46% of the variance in red-cell folate concentrations might be attributable to additive genetic effects.

Most studies find that food folate intake does not have a high correlation with red-cell folate levels

4.3.6 Uses and limitations of FFQ data as an alternative to blood samples

Misclassification is undoubtedly a problem with FFQs but surprisingly few biomarkers give a clear picture of nutritional intake. The inter-correlation between nutrients is also a problem for either FFQs or biochemical measurement. In the case of folate, at least, FFQs alone are very flawed, particularly when carrying out retrospective studies – most studies find that food folate intake does not have a high correlation with red-cell folate levels (correlation approximately 0.4). The chance of finding a folate-related effect on data derived from FFQs alone would have to be very small; nevertheless, the precise and detailed information requested by these questionnaires may possibly give one a false sense of security in the data. There are also practical difficulties with food tables in field conditions – particularly in assessing poorly nourished people in developing countries.

The alternative or complement to questionnaires for nutrient measurement is blood sampling and carrying out case-control studies on nutrient levels (or bio-markers such as homocysteine), provided disease status does not affect nutrient levels. Having overcome the logistics of sampling, there is an important issue in deciding from whom to collect blood (case, mother, father, or controls) and when the most appropriate

time to take a blood sample would be. While this was not resolved it was, however, recognized that the major problem of measurement bias in biochemical analyses and inter-laboratory differences in methodology to measure blood levels of folates could be overcome by centralizing and standardizing sample analyses in a reputable laboratory, using another laboratory to ensure quality control.

4.4 Other specific nutrients and orofacial clefts[1]

4.4.1 Vitamin B-6

Vitamin B-6 has been shown to protect against teratogen-induced clefts in many animal studies. Vitamin B-6 is the generic term for 3-hydroxy-2-methylpyridine derivatives that have the biological activity of pyridoxine. This vitamin plays many vital roles in amino acid metabolism, including transamination and decarboxylation reactions, and is the coenzyme in the degradation of homocysteine; there are thus many potential pathways in which vitamin B-6 protects against orofacial clefts. Vitamin B-6 deficiency alone was demonstrated to cause cleft palate and other birth defects in mice (Davis et al., 1970). Miller (1972) demonstrated that dietary vitamin B-6 also prevented the induction of clefts by vitamin A excess, cyclophosphamide, and beta-aminoproprionitrile; hence the role of vitamin B-6 in cleft prevention may be complex and involve several different mechanisms.

Despite the extensive investigation of the role of vitamin B-6 in animal models of clefting since the 1950s, there is little information on the relevance of vitamin B-6 to clefts in humans. Use of anti-nausea medications has been associated with a reduced risk of congenital heart defects in the Atlanta Birth Defects Case-Control Study (Erickson, 1991), and vitamin B-6 may have a role in this pathway *(see also Section 7.3.2)*.

4.4.2 Vitamin A

In experimental animals, vitamin A has been described as a "universal teratogen" (Schardein, 1993). The possible teratogenicity of dietary and supplementary vitamin A intake in the peri-conceptional period or early pregnancy in humans is controversial (Rothman et al., 1995; IARC Working Group, 1998; Miller, 1998). The debate has focused in particular on anomalies of structures derived from cranial neural crest cells, of which orofacial clefts are the most common type. There are considerable differences in the minimum teratogenic dose between species (IARC Working Group, 1998). The identification of genetic polymorphism at retinoic acid effector loci (RARA, AA7, MSX1) in

[1] See also Section 7.3.

humans raises the question as to whether there are inter-individual variations in susceptibility to the possible teratogenic effects of high intakes of vitamin A *(see also Section 7.3.4)*.

4.4.3 Zinc

Studies associating maternal zinc nutriture to the risk of orofacial clefts in humans are extremely limited. Only one study has been conducted to evaluate the association by independently analysing the risk of orofacial clefts from other malformations. In addition, there have been a few investigations involving a limited number of cases of orofacial clefts, where no meaningful statistical analysis was possible (Flynn et al., 1981; Soltan and Jenkins, 1982; Stoll et al., 1999).

4.5 Lifestyle, occupational and other environmental factors in orofacial clefting

4.5.1 Cigarette smoking

BOX H

Maternal cigarette smoking in pregnancy [2]

Maternal cigarette smoking during pregnancy has long been associated with a moderate increase in the risk of orofacial clefts (Andrews and McGarry, 1972; Kelsey et al., 1978; Khoury et al., 1987; Shaw et al., 1996; Kallen, 1997; Werler et al., 1990; Ericson et al., 1979; van den Eeden et al., 1990), although some studies have not confirmed such an association (Evans et al., 1979; Shiono et al., 1986; Malloy et al., 1989; Hwang et al., 1995). A recent meta-analysis of published literature (Wyszynski et al., 1997) produced a summary:

- OR of 1:29 (95% CI 1.18 to 1.42) for CL/P associated with maternal smoking during pregnancy; and
- OR 1:32 (CI 1.10 to 1.62) for CP.

As in many epidemiological studies on birth defects showing weak effects, several potential methodological problems can obscure a true causal association (Khoury et al., 1992). For instance, several studies have not considered the following separately: CL/P and CP; isolated and multiple forms (Khoury et al., 1989). In most studies, there is no evidence of a linear dose-response relationship between cigarette consumption and risk of orofacial clefts. However, if such an association were confirmed, cigarette smoking might account for as much as 20% of orofacial clefts in the general population (Khoury et al., 1989). Parallel investigation of genetic susceptibility and of gene/environment interaction in relation to smoking would also be of interest.

[2] See also Section 7.2.1.

4.5.2 Alcohol drinking[3]

Heavy alcohol drinking during pregnancy is known to alter embryonic development, and cleft palate has been described as an associated defect in 10% of severe cases of fetal alcohol syndrome (Lemoine, 1992). An increased risk of CL/P specifically was found in association with a heavy intake of five drinks or more per day (OR=3:0; 95% CI 1.1 to 8.5), a category which concerned only 0.5% of control mothers (Werler et al., 1991). In a recent study in the United States (Iowa), maternal consumption of more than 10 drinks per month was associated with increased risks for isolated CL/P (OR=4:0; 95% CI 1.1 to 15.1) and isolated CP (OR=1:8; 95% CI 0.3 to 12.1), statistically significant only for CL/P (Munger et al., 1996). Paternal drinking was not associated with orofacial clefts (Savitz et al., 1991). One problem in the quantitative interpretation of the few studies on maternal alcohol consumption and orofacial clefts is the wide range of consumption across studies, in which similar effects can be found for a consumption of 5 drinks per day in 1 study and 10 drinks per month in another. In a systematic review presented at the WHO consensus meeting in Utah (May 2001), Little noted that the interpretation of the relationship between alcohol and orofacial clefts may be complicated by publication bias. In a number of studies of smoking, alcohol has been considered as a potential confounder, but no primary results relating to alcohol have been presented.

4.5.3 Other environmental risk factors

There is an association between orofacial clefts and epilepsy, but some controversy about whether it is the disease or the treatment with anti-epileptic drugs (AEDs) such as phenytoin or phenobarbital that is important. It has been estimated that the risk of CL/P among a new-born of a treated epileptic mother may be as high as 1%, i.e. about 10 times the population average (Dravet et al., 1992; Johnston and Bronsky, 1995). In general, as far as it is possible to separate effects of disease and therapy, risks associated with treatment with AED (especially polytherapy) are higher than those associated with disease alone (not treated) (Abrishamchian et al., 1994; Wyszynski, 1996). Among all AEDs, phenytoin has been more specifically associated with the risk of orofacial clefts (Johnston and Bronsky, 1995; Dravet et al., 1992), and the folic acid antagonistic effect is a possible mechanism *(see below)*. To help resolve this, examination of familial aggregration and the rate of clefts in the offspring of men with epilepsy can be undertaken.

[3] See also Section 7.2.2.

4.5.4 Other illnesses and medications

A number of other environmental factors may influence the occurrence of orofacial clefts:

- **Viruses:** acute viral infections and cold have both been reported as having associations with clefts (e.g. Czeizel and Hirschberg, 1997), and there may be confounding by hyperthermia.
- **Folic acid antagonists:** possibly a factor in CLP but not CP (Hernandez-Diaz et al., 2000).
- **Benzodiazepines:** some studies show an increase in risk – retrospectively, but not prospectively.
- **Corticosteroids:** some studies show an association, but the difference between topically- and systemically-applied corticosteroids requires further investigation.
- **Retinoids and tretinoin:** known teratogens in animal experiments, but there is little evidence of their association with orofacial clefts.

4.5.5 Occupational exposures

Pesticides/herbicides, water contaminants and occupational exposures have been examined in relation to OFC. Registry data (Ericson et al., 1979; Hemminki et al., 1981) and large-scale studies (McDonald et al., 1988) have suggested associations between orofacial clefts and maternal occupation (health workers, the repair-services industry, industrial trade or agriculture). Subsequent studies among health workers have not confirmed an increased risk (Matte et al., 1993). Maternal occupational exposure to solvents has been related to orofacial clefts in the early study by Holmberg et al. (1982), and subsequent studies in France (Cordier et al., 1992; Laumon et al.,1996) and Europe (Cordier et al., 1997). Teratogenesis with trichloroethylene and tetrachloroethylene in water has been suggested and associations with farming work have indicated a possible role of pesticides, confirmed in some published studies (Gordon, 1981; Thomas et al., 1992; Nurminen et al., 1995) but not in others (Shaw et al., 1999). It is important to specify the study period as this may affect the type and intensity of exposure, and the measures in place to protect against potential adverse effects of exposure (e.g. regulations about use of respirators, etc.).

Occupations of the father in the printing industry, as a painter (Erickson et al., 1979), motor vehicle operator (Olshan et al., 1991), fireman or farmer (Schnitzer et al., 1995) have been associated with an increased risk of orofacial clefts.

4.6 Conclusions

- Main gaps in knowledge are in the examination of co-teratogens and gene/environment interaction – for example: with alcohol in fetal alcohol syndrome (FAS) are there co-teratogens such as folate deficiency, and is there a threshold beneath which alcohol is safe? and with alcohol drinking, is there an indication of a dose response in terms of risk, with greater than 500 ml per day showing a significant association?
- Smoking, alcohol, epilepsy, certain medications and environmental factors may explain a small but appreciable portion of birth defects.
- It is important to be able to differentiate the exposure and the genetic predisposition so that those at risk can be identified and selectively counselled.
- General advice regarding alcohol and smoking in relation to disease tends to be ineffective in achieving significant changes in behaviour. Novel strategies surrounding birth defects may achieve better results. However, one major issue in the reporting of associations with exposures is the distinct possibility of publication bias in the literature.

5 Role of genes in CFA

The genetics of craniofacial anomalies and of cleft lip and palate, in particular, as the single most important sentinel defect of this group is highly complex. As is evident from this summary report and others that accompany it, etiologies are many-fold and complex and include single-gene causes, chromosomal disorders, polygenic interactions, environmental risks, gene/environment risks, and even the likely role of chance. Studies in this area began formally in the 1930s and 1940s with the work of Paul Fogh-Andersen and subsequently continued in the 1950s with Clark Fraser (1968). In the ensuing years much has been learned about the genetics of craniofacial anomalies and the recent advances in the progress of the Human Genome Project with the availability of almost complete human and mouse sequence provide unique and special opportunities to further these studies in powerful ways.

At the same time that the genetics is advancing, it is also clear that many questions remain, including even basic questions of phenotype definition and strategies for gene identification. Equally importantly, these studies need to be carried out in conjunction with other investigators whose primary interests and abilities lie in the areas of epidemiology, environment, nutrition, and clinical trials and prevention. The success of folic acid interventions in preventing neural tube defects provides a benchmark against which other preventive strategies for birth defects can be measured and the hope is that improvements in surgical techniques, speech pathology, dental care, nursing, psychological and paediatric care, and the many other fields involved with children with CFA will occur in concert with studies of etiology and prevention. By working together we can all provide a better future for children born with CFA, in the hope that prevention of these defects occurring in children will also be soon on the horizon.

5.1 Embryogenesis

By working together we can all provide a better future for children born with CFA

Development of craniofacial structures represents the complex interactions of many genes and environmental triggers. Studies of monozygotic twins whose facial appearances are almost completely overlapping in recognizable phenotypic features tell us that the role of genetics is almost 100% determinant in providing the outline of normal facial structures. Similarly, studies of monozygotic twins show a much higher concordance rate for non-syndromic forms of cleft lip and palate than would be found in dizygotic twins or siblings, again supporting the strong role of genetics in the etiology of defects of development. Nonetheless, concordance is only between 40% and 60% for clefting in monozygotic twins, which strongly supports the observation that the role of *in utero* environment or possibly some element of stochastic variation is also critical in determining which child might be born with which particular form of craniofacial disorder. Independent of non-syndromic forms of cleft lip and palate are many other defects of craniofacial regions, including other forms of clefts, craniosynostosis, and ocular and ear anomalies that have equally wide and disparate causes. During the course of the meeting, the etiology and pathogenesis of both orofacial clefting and craniosynostosis were reviewed in detail by Dr Michael Cohen (Cohen, 1995). In addition, the entire topic of craniofacial development has recently been extensively reviewed and reported upon by Geoffrey Sperber (2001), and this text as well as other recent publications on embryogenesis can serve as valuable resources for individuals with an interest in craniofacial disorders. Recent references include extensive lists of genes that have already been shown to play an important role in facial development; these genes can, in many cases, be divided into the roles that they play in a variety of morphogenetic pathways. These can include genes identified as growth factors, cytokines, self-signalling molecules, structural proteins (such as collagens or extra cellular matrix proteins), and other forms of morphogens or signalling molecules. Table 6 below lists a few of the genes that, from available genetic evidence, play a role in facial development; this list is in no way comprehensive and is, in fact, changing almost daily.

Table 6: Identified genes/clefts

Genes	Syndromes
CDKN1C	Beckwith-Wiedemann
COL11A1	Marshall
COL11A2	Stickler/Nance-Insley
COL2A1	Stickler/Kniest
CREBBP	Rubinstein-Taybi
DHCR7	Smith-Lemli-Opitz
DTDST	Diastrophic dysplasia
FGD1	Aarskog
FGFR2	Apert
FKHL15	Hypothyroidism
GLI3	Grieg/Pallister-Hall
GPC3	Simpson-Golabi-Behmel
KAL1	Kallman
L1CAM	MASA
LMX1B	Nail-patella
MID1	Opitz
MITF	Waardenburg 2A
PAX3	Waardenburg
PEX1,2,5,6,12	Zellweger
PTCH	Basal cell nevus
SHH	Holoprosencephaly
SIX3	Holoprosencephaly
SOX9	Campomelic dysplasia
TREACLE	Treacher Collins
TWIST	Saethre-Chotzen

Source: Murray JC, 2002

The availability of web sites provides opportunities to update the ongoing lists of candidates, as do the databases of clinical disorders involving craniofacial structure; these databases now identify many hundreds of such disorders. Valuable web sites for discussions of clinical aspects of human craniofacial disorders are listed below.

Table 7: Web sites

OMIM http://www3.ncbi.nlm.nih.gov/Omim/searchomim.html
A listing of Mendelian disorders and genes; comprehensive for humans and extensively referenced with descriptive and historical data.
Human dysmorphology database http://www.hgmp.mrc.ac.uk/DHMHD/dysmorph.html
A searchable database that provides both human and mouse homologies and also allows identification of disorders based on clinical, phenotypic and laboratory features.
Gene Tests/ Gene Clinics http://www.geneclinics.org/
Gene Tests and Gene Clinics are complementary databases. Gene Clinics provides descriptions of many genetic disorders, with an emphasis on management and diagnosis. Gene Tests provides a listing of both clinical and research laboratories currently carrying out molecular studies on a wide range of human disorders, including those involving craniofacial structures.

5.2 Clinical definition of craniofacial anomalies

This topic included discussions by Drs Michael Cohen, Marilyn Jones and Howard Saal of how craniofacial disorders can be defined from a broad perspective, with focused discussions on what would constitute the difference between non-syndromic and syndromic forms of cleft lip and palate and cleft palate only (Jones, 1988).

From the perspective of syndromic identification, many syndromes are now undergoing a revolution in their description as molecular ab-normalities of individual genes are defined and redefined. This has been particularly evident in the description of the craniosynostosis syndromes as a variety of fibroblast growth-factor receptor genes, as well as at least one homeobox gene, have been demonstrated as having mutations that are etiologic for those disorders previously described as phenotypes. The situation has become immediately complex with different genes demonstrating mutations with apparently similar phenotypes, such as Pfeiffer syndrome associations with both FGFR1 and FGFR2 mutations, as well as the same gene having mutations that would have been separated on the basis of phenotypic appearances, such as Crouzon's and Pfeiffer's and mutations in FGFR2. Extensive discussions regarding the role that molecular definitions should play in conjunction with clinical delineation took place.

From the perspective of non-syndromic forms of clefting, the discussion was equally wide-ranging. Historically, based on animal as well as human segregation analysis and recurrence risk studies, cleft lip with or without cleft palate has been separated from cleft palate only. It is now evident

that there can be at least occasional overlap between these phenotypes, as has been demonstrated for MSX1 mutations in at least one large family that includes individuals with isolated cleft palate, as well as cleft lip and palate (van den Boogaard, 2000). It has also been recognized for the last few decades in the case of the autosomal-dominant van der Woude's syndrome. Thus, the historic separation of these two categories on embryologic and genetic grounds – while still a valuable tool – is not 100% representative of observational data.

The description of what constitutes non-syndromic forms of clefting ... has yet to be fully resolved

The description of what constitutes non-syndromic forms of clefting was also extensive and has yet to be fully resolved. This discussion is important in that studies undertaking genetic mapping of cleft lip and palate have increased power when phenotypes can be accurately and reproducibly identified. Thus, the ability to generate sub-phenotypes based upon what might have previously been thought of as normal variation is especially critical. In addition, associated major and minor anomalies can have an important impact on whether cases are included or not included in a study and, until molecular definitions begin to separate what should or should not be included in a particular definition, the discussion and criteria need to be established on the basis of clinical and embryologic grounds. Some definitions of non-syndromic clefting disorders would exclude any child with any other major organ system malformation, as well as a number of minor malformations, while other systems might allow the inclusion of a single major, or one or two minor, malformations. Recent developments in ultrasound also afford the opportunity to look for sub-clinical manifestations of clefts, such as deficiencies of the orbicularis oris muscle; these can also be very valuable tools for generating such sub-phenotypes.

In conclusion, and discussed further in Section 6 below, it is clear that these issues need to be formally addressed in any study that is carried out, and that investigators engaged in collaborative studies need to have consensus views for case inclusion and exclusion. Until the molecular phenotypes begin to help sort this out, both narrowly as well as broadly defined phenotypes may be used in genetic mapping studies; the availability of powerful computer analytic programmes also affords the opportunity to carry out multiple sets of analyses on subsets of clinically-defined cases, all drawn from a common larger data set. Table 8, below, shows some disorders where affected individuals might present as a "non-syndromic" cleft.

Table 8: Single-gene disorders that can mimic non-syndromic clefting

Phenotype	Single-gene disorder
Cleft lip and/or palate	CPX
Cleft lip and/or palate	EEC
Cleft lip and/or palate	CLPED1
Cleft lip and/or palate	VDWS

Source: Murray JC, 2002

5.3 Mouse models

The utility of the mouse for comparative studies of human genetic disorders has been widely acknowledged since the early 1900s. This work has become even more valuable as the ability to generate gene-specific knockouts or over-expression transgenics has become available. Coupled to the utility of the mouse as an experimental organism in which embryo manipulation can be carried out, is the very powerful genetics available through this system in which many generations of controlled breeding can be performed in a relatively short period of time. Finally, since the mouse is a mammal, many of its embryologic and developmental processes are closely related to those of the human. In the area of craniofacial development, studies of the mouse have been especially productive. A large number of knockout and transgenic animals that have been generated demonstrate disruptions of craniofacial structures and have provided opportunities to investigate genes identified in development. Evaluation of genes whose expression pattern also supports a role for development of craniofacial structures has also been critical. Particularly relevant models in the mouse come from knockouts of MSX1 (Satokata and Maas, 1994), TGFβ 3 (Proetzel et al., 1995) and SKI (Colmenares et al., 2002). Spontaneously arising mutations, particularly ones in which the defects are focused on a specific craniofacial structure, such as the cleft models CLF1 and 2 studied by Diana Juriloff (2001), have also been particularly relevant. And finally, the work of investigators, such as Robert Erickson and Scott Diehl (1997), in carrying out genome-wide strategies to look at gene/environment interactions and the role of teratogens in mouse models of clefting has also been very fruitful in providing localizations to regions that have high homology to human chromosomes as a way to better understand these forms of interactions. The availability of large amounts of mouse DNA sequence and very detailed mouse genetic maps and reagents for carrying out mapping also make the mouse an especially productive engine for the study of craniofacial anomalies. During the course of the meeting, details as well as new data were presented by Drs Diehl, Erickson and Juriloff and

provided opportunities for investigators working in human genetic systems to interact directly.

5.4 Genotyping

Advances as well as current strategies revolving around the issue of genotyping were discussed, particularly as they relate to humans. Genotyping includes the genetic analysis of variation and, for purposes of studies of cleft lip and palate, can be applied to genome-wide searches for gene or locus identification or to association studies using candidate-gene analysis. In addition, discussion about the use of chromosomal anomalies in gene finding was also provided. Besides the methodologies involved in the genotyping *per se*, discussions over strategies and particular analytic approaches were also carried out.

5.4.1 Strategic approach

BOX I

Strategic approaches

The cleft lip and palate genetics literature is a fusion of studies that have made use of candidate-gene and association analysis with a more limited number of studies that have used a linkage or genome-wide approach. A recent review summarized the "state-of-the-field" in 2002 (Murray, 2002) with loci on chromosomes 1, 2, 4, 6 and 14 holding particular interest. The difficulties in studying a complex disease, such as cleft lip and palate, include identification of a sufficient number of families in order to have the ability to effectively carry out a genome-wide approach. Thus, many early studies as well as current studies have made use of candidate-gene approaches to look at cases and have compared allelic frequencies with a control population. Very recently the ability to carry out direct candidate-gene sequencing has also been incorporated into some studies. While no single approach is likely to provide all the answers, there have been some preliminary successes with each of the above-mentioned approaches. In addition to the strategic approach selected, individual methodologies are also rapidly changing – as is common in molecular biology – and ongoing evaluation of the specific methodologic approaches will also be key for projects selected within individual laboratories. Finally, the ability to coordinate either analytic techniques or specific methodology and marker selection were important issues also discussed.

5.4.2 Analysis

Analytic approaches can use, for genome-wide searches, either parametric or non-parametric analyses. High-density genetic maps (Broman et al., 1998) and public resources for genotyping such as the NIH-sponsored Centre for Inherited Disease Research (CIDR) provide opportunities for even modestly-funded investigators to undertake such searches. Parametric analysis is the standard linkage approach in which the mechanism of inheritance pattern needs to be specified and can greatly benefit when a single large family is available. A recent report by van den Boogaard (2000) illustrates the utility of this approach when a single large family segregating for cleft lip and palate was identified, shown to be linked to the MSX1 locus on chromosome 4, and a point mutation resulting in a stop codon within this gene eventually identified. This family is especially remarkable in that many of the individuals have a phenotype that, if viewed in isolation, would be readily characterized as non-syndromic cleft lip and palate and raises the possibility of this disorder, at least in some cases, being caused by mutations in MSX1. The difficulty of this approach is that large families, such as the one described by van den Boogaard, are rare and may not provide insights into the most important or frequent genes involved in non-syndromic forms of clefting. Pools of such families can also be used in standard linkage analysis, and this approach has been used for many other complex disorders.

Within ... the parametric and non-parametric categories there are many competing analytic strategies

A compliment to the parametric approach is the non-parametric approach or the affected-pedigree member technique. This approach is best exemplified by sib-pair analysis in which pairs of affected siblings are identified and evidence for statistical aberrations in the proportion of alleles shared either by identity or descent established through genotyping. This approach, though powerful in that genetic mechanisms do not have to be specified, is unable to provide the more defined locus identification that will come about through linkage approaches. Most investigators would now choose to assemble a collection of families in which either analytic strategy, in general, could be applied and then carry out complimentary analysis using a multiplicity of approaches. Even within each of the broad categories – parametric and non-parametric – there are many competing analytic strategies that are discussed in more detail in other publications. Furthermore, the addition of analysis of variance approaches in which the severity of the phenotype can be taken into account, as well as the addition of environmental variables as an analytic variable, are also important considerations in current study designs (Almasy and Blangero, 1998). Although only one large genome-wide search has been carried out (Prescott et al., 1999), there are now under way genome-wide approaches from other laboratories; it is likely that over the next few years additional evidence from these searches will be provided.

Several candidate loci searches using 10 to 40 families have already been reported (Carinci et al., 2000; Marazita et al., 2002). Table 9 below summarizes some linkage work done in humans.

Table 9: Human loci/genes for suggested linkage

Position	Disorder*	Method**	Cloned	[Candidate]
1p36	NS	L/CH	–	[SKI]
1q32	VDWS	L/CH	IRF6	–
2p13	NS	L/LD	TGFα	–
3q27	EEC3	L/KO	P63	–
4p16	NS	LD/CH/KO	MSX1	–
4q31	NS	L/LD	–	–
6p23	NS	L/CH	–	[AP2, EDN1]
11q23	ED4	L	–	–
14q24	NS	LD/KO	TGFβ 3	–
9q13	NS	L/LD	–	–
Xq21	CPX	L/CH	TBX22	–

Source: Murray JC, 2002

* Disorders:
- NS: non syndromic
- VDWS: Van der Woude syndrome
- EEC3: ectodermal dysplasia/ectrodactyly and clefting syndrome 3
- ED4: ectodermal dysplasia and clefting syndrome 4
- CPX: X-linked cleft palate and ankyloglossia

** Methods:
- L: linkage
- CH: chromosomal rearrangement
- LD: linkage disequilibrium
- KO: mouse knockout

The complements to family-based approaches are those that use case and control populations. These studies are best carried out when a candidate gene or locus is available as they depend on the phenomenon of linkage disequilibrium, active over only very short physical distances of DNA. This limits the study to a handful of 10 to perhaps 100 loci, given current fiscal realities and available markers. The selection of candidate genes can often take place using the descriptions provided through developmental biology or mouse models, and frequently utilizes genes shown to be expressed in the developing palate or genes whose disruption in a knockout mouse, for example, would result in a cleft lip or palate phenotype. Judicious selection of candidate genes can be an effective tool in identifying a genetic component of a common disorder. These studies in cleft lip and palate were initiated in 1989 with the study of Ardinger et al. in which evidence for the role of TGFα was provided and a case-control approach was

followed, using non-syndromic cleft lip and palate as the cases and convenience controls, selected from the same geographic area as the cases were collected. Since this publication, the literature has expanded greatly with a number of additional studies, including those using more powerful analytic techniques, that have provided both positive and negative results. A summary of these studies, given in Table 10 below, would seem to support some evidence that both TGFβ 3 and MSX1 are genes involved in clefting.

Table 10: Candidate-gene studies for CL/P

Gene	Analysis	Result	Author
TGFα	meta	OR=1:43 (1.12 to 1.80)	Mitchell
MSX1	case-control	p<0.005	Lidral
MSX1	AFBAC*	p<0.04	Lidral
MSX1	TDT	p<0.001	Vieira
TGFβ 3	TDT	p<0.008	Lidral
TGFβ 3	TDT	p<0.01	Maestri
TGFβ 3	TDT	p<0.02	Vieira

* Affected family member-based controls.

Source: Murray JC, 2002

The addition of newer analytic strategies, such as the transmission disequilibrium test (TDT) (Spielman and Ewens, 1996) and likelihood ratio test (LRT) (Umbach and Weinberg, 2000) tests in which transmission distortion or family-based allelic controls to prevent the confounding of ethnic matching, provides for even more powerful platforms for the collection of information. In addition, it is now possible and feasible to collect hundreds of families with a focus on nuclear triads, consisting of an affected child with the mother and father (as shown below in Figure 1 below), in which substantial power for detecting even small gene effects is available.

Figure 1: Nuclear families as internal controls

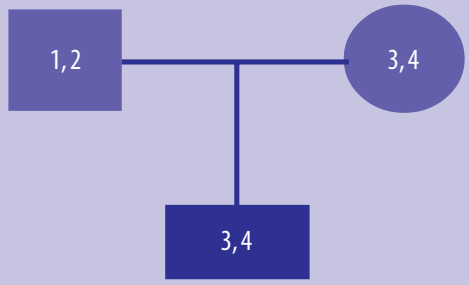

As the selection of candidate-gene panels also becomes more robust, these approaches are likely to be successful.

5.4.3 Sample collection

Sample collection issues are of paramount importance and were discussed widely. While it is easy to collect samples in the form of buccal or cheek swabs, for example, the DNA available from these is limited and, at the present time, is unlikely to comprise enough for a genome-wide search. Whole blood samples are more robust, both in terms of the quality and quantity of DNA available, and are usually sufficient to apply to genome-wide searches in which approximately 20 micrograms of high quality DNA would be required. Whole blood, however, can present challenges in collection and, in the case of small infants, may be limited by available quantities. Additional advantages of whole blood include the possibility of saving plasma or serum for analysis of other analytes, such as micronutrients or storing cells for subsequent RNA or protein studies. Other tissues, including cord blood, placenta and materials obtained from the site of surgery, also provide opportunities for other forms of analysis. Materials obtained at the site of surgery, for example, might be useful for looking at abnormalities of gene expression found in affected tissues. While there is no single sample collection strategy that can solve all the financial and technical problems, the issues raised by these were important considerations for the group as a whole and, from ongoing studies, it is clear that a variety of study designs have been selected as most appropriate for particular projects. For example, the large collaborative study under way, sponsored by the US Centres for Disease Control, has chosen buccal swabs as these can be obtained via the mail from individuals who self-collect on themselves and their children. The advantage is that this is a very cost-effective approach; it allows for the collection of thousands of samples yearly on a limited budget and also provides limited amounts of DNA for analysis. Other studies have collected blood-spot samples and these may prove to be especially effective when studying newborn populations. These samples are useful in that they can be stored indefinitely and inexpensively but are compromised by the limited quality and amount of their DNA; there may be challenges to comprehensive analysis of DNA from such samples where only certain genotyping approaches may work.

5.4.4 Collaborative strategies

See Box J, facing page.

BOX J

Collaborative strategies

A variety of efforts, already under way, foster collaborative interactions in the study of cleft lip and palate. A few of these are described below.

1. Estudio Colaborativo Latino Americano Malformaciones Congenita (ECLAMC)

ECLAMC is a collaboration, established in the mid-1960s in South America, in which up to 100 participating hospitals have one or more volunteer paediatricians who collect demographic and clinical data on a wide spectrum of structural birth defects, including cleft lip and palate. The data is entered in a common format and returned to a central repository for storage and evaluation. While this collaboration makes use of volunteer physicians, it has proven to be highly effective and currently collects data on approximately 200 000 cases per year. Numerous studies have been published by this group, including some relevant to cleft lip and palate suggesting, for example, that altitude or ethnicity may be important roles in determining risks for clefts. Recently the group has also incorporated blood sampling from children and parents into their strategy, and it is likely that this will provide extremely powerful data for analyses, given the large number of samples available.

2. US Centers for Disease Control and Prevention (CDC)

For the last five years, the US Centers for Disease Control and Prevention has sponsored an eight-location collaboration to collect data from 2400 cases and 800 controls per year, with a collection of 30 structural birth defects, including cleft lip and palate. In addition, biological sample collection in the form of cheek swabs, collected from infants and their parents, has also been incorporated to complement an extensive interview of the mother in which data regarding pregnancy risks, such as drug exposures, outcomes, nutritional factors and family history, are all incorporated. Data, as well as biological samples, are stored in a central repository and made available to collaborating investigators for addressing specific hypotheses. Because there are such detailed characterizations of environmental exposures along with the collection of DNA samples, this project has enormous power to study gene/environment interactions across a broad geographic range in the United States.

3. European Collaboration on Craniofacial Anomalies (EUROCRAN)

A multi-centre collaboration funded by the European Union (Contract Number: QLG1-CT-2000-01019) was established, combining existing networks that have already been established by EUROCLEFT and the European Science Foundation (ESF) (http://www.esf.org). A pan-European, multi-centre, multidisciplinary effort has evolved. The innovation arises from the involvement of international experts at the cutting edge of research in their respective fields, and the application of advances in basic sciences and molecular biology to clinical research is seen as the way forward. A number of ground-breaking work packages have been undertaken, collectively aimed at improving knowledge on the etiology and pathogenesis of craniofacial abnormalities, introducing precise diagnostics/risk assessment, developing therapeutics and producing the best (evidence-based) treatment protocols. These research efforts are being extended to Eastern Europe, and the ultimate objective is to pursue their implementation further afield *(see Annex 1)*.

4. European Registry for Congenital Anomalies and Twins (EUROCAT)

EUROCAT is a European network of registries for the epidemiologic surveillance of congenital anomalies. EUROCAT began in 1979 and currently surveys more than 900 000 births per year. Through its work on harmonization of methodology, particularly for ascertainment, EUROCAT has become an established reference centre for population-based information on congenital anomaly prevalence and time trends. The EUROCAT collaborative framework seeks to exploit the power of transnational collaboration in data collection and exchange of expertise to address issues of concern on birth-defects prevention and service delivery (http://www.lshtm.ac.uk/php/eeu/eurocat).

5.5 Recent developments

While the field of craniofacial anomalies and genetic studies is rapidly moving, a few comments about recent developments are useful. Genes continue to be cloned for a variety of syndromic forms of cleft lip and palate and, very recently, the first craniofacial anomaly identified through linkage – X-linked cleft palate/ankyloglossia syndrome – has had its gene (TBX22) identified (Braybrook et al., 2001). In this case, a transcription factor, TBX22, has been shown to be at fault, and this further opens the door for additional investigations of other transcription factors or their pathway members in non-syndromic forms of clefting. In a complimentary report, the Spritz group (Sozen et al., 2001) has provided evidence that heterozygotes for the PVRL1 gene, which had previously been shown to have etiologic mutations in the Margarita Island ectodermal dysplasia clefting syndrome (Suzuki et al., 2000), had heterozygotes that have an increased frequency of non-syndromic clefting in populations studied in Venezuela. This raises the possibility that heterozygotes for syndromic forms of clefting might occasionally be at increased risk for non-syndromic forms and that, potentially, gene/environment interactions might further complicate this story. This is an important and exciting finding that opens the door to many additional forms of investigation. Candidate-gene studies have continued to be expanded and Terri Beaty's group (2002) has also recently reported additional evidence for the role of the MSX1 homeobox gene in cleft lip and palate. The gene for the van der Woude and Popliteal pterygium syndromes, interferon regulatory factor 6 (IRF6), has also been reported (Kondo et al., submitted). Finally, new efforts at genome-wide approaches are under way and are likely to contribute new information in the near future.

6 Gene/environment interactions

6.1 Introduction

The role of genes, genetic susceptibility and gene/environment interactions (GEI) in the etiology of orofacial clefts remains largely unknown. However, with the availability of the human genome sequence, researchers have increasing opportunities to study the role of genes and gene/environment interactions in human health and disease (Schutte and Murray, 1999). Discussions, led by Lorenzo Botto, sought to examine these opportunities and the major accompanying challenges in three main areas:

- **The first area relates to data:** to identify and, if possible, rank the major data gaps separating our current knowledge from that needed for clinical and public health action.
- **The second area relates to methods:** how to conduct, analyse and present studies of multiple genetic and environmental factors in ways that efficiently fill the data gaps.
- **The third area relates to people and institutions:** how to learn more and more quickly, using the unique opportunities inherent in international collaboration.

BOX K

Gaps and challenges in the study of GEI in orofacial clefting

Data challenges

- Representative populations
- Focus on common exposures and gene variants

Methodology challenges

- Improved assessment of environmental exposures
- Careful design, complete presentation
- Systematic assessment of risks and impact

Collaboration challenges

- Use, share, pool data
- Sample size – more people, more countries
- Standardized methodologies

6.2 Data challenges

6.2.1 Representative populations

Because the ultimate goal is population-based action (prevention, intervention), scientists need data that is representative of populations. For example, the frequency of gene variants and exposures should come from population-based surveys, the risk estimates from population-based case-control studies, and so on. Such requirements for population-based studies can be a major constraint to study design and conduct; ultimately, however, there is no known alternative for gathering population-based data. Some measures of risk (e.g., the effect of genes alone, departure from multiplicative interaction) could be provided by family studies or case-only studies that are not population based. Such studies can be very useful. However, the full spectrum of gene effects and gene/environment interactions and estimates of attributable fraction require, for identification or confirmation, population-based studies such as population-based case-control studies, as discussed below.

6.2.2 Focus on common exposures and gene variants

There are many genes and exposures that one could study. Indeed only a handful of gene variants and exposures have been studied in relation to orofacial clefting, leaving options virtually limitless. From the preventive perspective that underlies this discussion, it is natural to suggest an initial focus on factors that might contribute to the greatest fraction of cases in the population, i.e., factors with the highest attributable fraction. The latter is a function of the factor's relative risk and its frequency in the population. Because the relative risk is difficult to gauge in advance, frequency of exposures might be a reasonable factor to consider in ranking the potential interest of exposures. This concept is put into numbers in Table 11 (below) which summarizes the population-attributable fraction of a hypothetical exposure, given a range of associated relative risks and exposure frequencies.

Table 11: Population-attributable fraction in relation to frequency of exposure and relative risk

Frequency of exposure		Relative risk (RR)						
		1.2	1.5	2	3	5	10	20
	0.0001	0.00	0.00	0.00	0.00	0.00	0.00	0.00
	0.001	0.00	0.00	0.00	0.00	0.00	0.01	0.02
	0.01	0.00	0.00	0.01	0.02	0.04	0.08	0.16
Fever	0.05	0.01	0.02	0.05	0.09	0.17	0.31	0.49
Obesity	0.1	0.02	0.05	0.09	0.17	0.29	0.47	0.66
	0.3	0.06	0.13	0.23	0.38	0.55	0.73	0.85
Smoking	0.5	0.09	0.20	0.33	0.50	0.67	0.82	0.90
	0.7	0.12	0.26	0.41	0.58	0.74	0.86	0.93
No supplement	0.9	0.15	0.31	0.47	0.64	0.78	0.89	0.94

Source: Dr Lorenzo Botto (unpublished data)

Studying small relative risks is, however, challenging as it requires large sample sizes and careful assessment of bias and confounding. Multi-centre and international collaboration with common protocols might be a useful strategy to overcome some of these difficulties. Finding GEI that involve common exposures might also be useful in confirming the role of such exposures in the etiology of orofacial clefting, particularly when the exposure alone is associated with low increased risk (e.g. smoking) that might be due entirely to unrecognized bias or confounding.

Finally, because of the potential impact of these common factors, negative studies become very important. Their replication and publication should therefore be encouraged.

6.3 Methodology challenges

The problems in gene/environment interaction research reside mainly with the *a priori* specification of the interaction model and with the statistical power required. It is also felt that there are difficulties in measurement of the environmental exposure.

It should also be noted, however, that genotype may effect the level of a biomarker and this is particularly important when examining nutrient status.

6.3.1 Improved assessment of environmental exposures

... look not only at genes alone, or at environmental factors alone, but also at their interaction

The problems in gene/environment interaction are mainly with the environmental aspect. With genes it is possible to carry out more analyses in shorter time periods with good reliability, but better assessment methods are urgently needed for assessment of environmental factors, as well as issues such as measuring versus reporting – the former being more objective while the latter is easier and less expensive.

Environmental exposures are now usually based on maternal reports, often taken months or years after the relevant exposure period. Objective biomarkers of exposure and effect are, for the most part, lacking. Biologic samples for measurement of environmental exposures (urine, hair, serum, whole blood) are difficult to obtain – more so than DNA sources – as are environmental samples (air, water, soil). The precision and validity of GEI studies is a function of the validity and precision of both the genetic and the environmental component, making improvements of environmental measurements a priority in GEI studies.

6.3.2 Careful design, complete presentation

Currently, several approaches are being used. Some classic published studies of GEI in OFC were conducted using the population-based case-control design (Denmark and the United States (Iowa and California)). In recognition of the genetic predisposition and GEI, a study design in the United Kingdom adopted a strategy using both case triads and control triads (ITSMAGIC Consortium) and a large ongoing study in the United States is based on a similar design. Some ongoing studies from Europe and the United States are based on case-triad designs. At least one large ongoing study in the United States is based on a mixed case-control design, using both case triads and control triads. These designs were carefully chosen as being the best for the objectives of the studies, given practical constraints; the hope is that the cumulative knowledge so obtained can be integrated to completely characterize, in the sense discussed above, the population-based indices of GEI in orofacial clefting.

It is important to look not only at genes alone, or at environmental factors alone, but also at their interaction. A simple and effective way of looking at gene/environment interaction is exemplified by the 2 x 4 table approach using a case-control model. This approach allows for the study of the effects of each factor or gene alone, joint effects, and the assessment of interaction in terms of departure from any specified model, be it additive or multiplicative (or other).

6.3.3 Systematic assessment of risks and impact

In addition to the summary measure of interaction (be it additive or multiplicative), it is useful to derive and present the component factors, i.e., the effect of the genotype alone, the exposure alone, and the joint effect of both genotype and exposure. For each of these factors, it is useful to present three numbers: the frequency among controls, the relative-risk estimate, and the attributable fraction. These numbers (the frequency, risk and impact for the three components of interaction and the summary measure) neatly summarize many important aspects of a GEI.

6.4 Collaboration challenges

6.4.1 Use, share, pool data

Like most research, results from studies of OFC carried out independently are often difficult to compare because the studies are relatively small and often use different classifications of exposures and outcomes. Indeed, one of the most common sentences in published reports may be variations of "comparison with other studies is difficult because of methodologic differences". Such comparisons, however, might still be possible if one reverts to the original, individual-level data. Thus collaborative, primary-pooled analyses might be an efficient strategy to maximize the information yield of already-conducted studies. In addition, international collaboration might benefit from the sharing of unpublished data from studies that may have been published in part, perhaps using a common repository of unpublished tables. Pooling data from such tables might be appropriate in some cases, provided there is an awareness of differences in data-collection methodology, biases and confounders, and that any subsequent evaluation or analysis recognizes these factors.

6.4.2 Sample size

BOX L

More people, more countries

Sample size is a fundamental issue in GEI studies. In the case of orofacial clefting studies, the challenge of sample size is evident in the published literature where the expected number of cases in the relevant exposure category is usually very small, often less than 10 and sometimes less than 3. Carefully conducted multi-centre and international collaboration might provide a useful strategy to study larger numbers of people, provided there is adequate control of confounding and elimination of biases.

Most data on GEI in orofacial clefting derives from studies of small, wealthy populations (e.g., Denmark and the United States (Iowa, California)). Whilst this is to some extent unavoidable, it underscores the need for similar data in populations that are geographically and ethnically diverse. Orofacial clefting occurs more frequently and causes more morbidity and mortality in the less wealthy countries (Schutte and Murray, 1999; Rosano et al., 2000). Finding GEI that are relevant to these populations (and simple, inexpensive, low-tech prevention strategies) would satisfy elementary requirements for social justice.

Also, broadening the range of exposure probably makes misclassification have a smaller impact than improving the precision of exposure assessment would.

6.4.3 Standardized methodology

In disorders that are thought to have a polygenic multi-factorial etiology, as is the case for non-syndromic orofacial clefting, there is a compelling need for researchers to be able to compare their data on putative environmental and genetic factors. The fundamental principle on which multi-centre collaborative research works is that there is a consistency in the methodology of data collection, thus enabling combined analysis.

A multidisciplinary multi-centre European initiative, supported by the European Science Foundation (ESF) has, as one of its main objectives, sought to define in a number of key areas the important data and accompanying methodology of this data collection. The common factor which brought this body of expertise together was a research interest in orofacial clefts and, because of the polygenic multi-factorial etiology and evidence of heterogeneity, this group sought to develop consistent protocols across populations with variable genetic backgrounds, lifestyles, diets and environmental exposures. The parallel development of global networks in CFA research, through funding from the European Union, the NIH and WHO, will enable researchers throughout the world to benefit from these "common core protocols".

While these have been developed in the context of orofacial clefting, they may provide useful information in the wider context of reproductive outcome – in particular, for other birth defects also suspected of having a polygenic multi-factorial etiology.

6.5 Conclusions

The study of GEI in orofacial clefting has achieved some remarkable successes, and developments in genetic technology promise that such successes are only the beginning (Schutte and Murray, 1999). The eight challenges presented here might stimulate discussions that could lead to useful collaboration. The task ahead is still enormous. There are thousands of gene – gene/environment interactions possible and 99.96% of genes in the population remain untested. In those that are tested, genotype frequencies vary in different populations. Shared priorities, clear planning and international collaboration are likely to be key factors in progressing from basic science to population-based opportunities for primary prevention worldwide.

7 Prevention of CFA

7.1 Meeting objectives

BOX M

Objectives of the WHO meeting on the prevention of CFA

- Identify environmental and behavioural factors with established associations with orofacial clefts and other craniofacial anomalies (CFA) and recommend global public health initiatives for the prevention of CFA caused by these factors.
- Review evidence regarding the role of specific maternal, nutritional factors in the etiology of orofacial clefts and other CFA.
- Reach a consensus regarding the role and importance of nutritional supplementation trials in evaluating the causal role for specific nutrients in the etiology of orofacial clefts and other CFA.
- Discuss aspects of the design of orofacial cleft and CFA-prevention trials and their ethical, legal, social and financial implications.
- Make recommendations regarding the resources needed to implement international collaborative studies of CFA prevention with common core protocols.

7.2 Environmental and behavioural factors and orofacial clefts

Craniofacial anomalies are among the most common birth defects and, of these, orofacial clefts are the most frequent. As described in the *World Atlas of Birth Defects* (World Health Organization, 1998) and in Section 2.1 of this report, there is a great deal of variation in the occurrence of orofacial clefts in different populations throughout the world. It is likely that this is due to both environmental and genetic factors. Poverty has been previously associated with an increased risk of neural tube defects and, more recently, with the occurrence of orofacial clefts (discussed in Section 4.1), providing evidence that environmental factors play an important role in both type of birth defects. Data from Brazil, China and the United States (Utah) presented at the WHO/Utah meeting support the view that the pattern of occurrence of neural tube defects is different from that of orofacial clefts across geographic areas and time periods, indicating that the environmental factors that cause these defects are not the same. The specific components of the environment of the poor, relating to orofacial clefts, are unclear but could include exposure to tobacco smoke, alcohol, occupational or residential exposures to teratogens, and poor nutritional status.

7.2.1. Tobacco and orofacial clefts

Maternal cigarette smoking is perhaps the best studied environmental risk factor for orofacial clefts. As summarized above in Section 4.5.1, maternal tobacco use during pregnancy has been consistently associated with a modest elevation in risk of orofacial clefts. Given the frequency of the habit among women in the United States, smoking may account for as much as 20% of orofacial clefts in the country's population. The risk of orofacial clefts attributable to smoking may be underestimated because exposure of pregnant women to passive smoking in the home and workplace has not usually been taken into account.

Over one billion people worldwide smoke and nearly three-quarters of these live in developing countries, often with relatively low levels of public and political support for effective tobacco control measures. (Aghi et al., 2002). Numerous reports have documented that smoking prevalence rates among women aged 15-25 years have steadily increased globally over the past decade (Windsor, 2002). It was estimated that in 1995, 12-14 million women worldwide smoked during their pregnancy and, when passive smoking was accounted for, 50 million pregnant women, out of a total of 130 million, were exposed to tobacco smoke during their pregnancy (Windsor, 2002). The second wave of the epidemic of tobacco-related

diseases is resulting from women being actively targeted by tobacco companies and taking up smoking in increasing numbers (Kaufman and Nichter, 2002). The traditional habit of chewing tobacco among women in many populations may also represent an under-studied source of tobacco exposure during pregnancy.

The association between maternal smoking and orofacial clefts may not be widely appreciated by international health organizations. The US Surgeon-General's *Report on Women and Smoking* notes that, while the overall risk of birth defects does not appear to be related to maternal smoking, certain specific birth defects have been including orofacial clefts, limb reduction defects, and urogenital defects (Office of the US Surgeon General, 2001). Orofacial clefts were not mentioned however in the most recent WHO report, *Women and the Tobacco Epidemic: Challenges for the 21st Century* (Samet and Yoon, 2002). The tobacco-related health effects of stillbirth, prematurity and intrauterine growth retardation are much more common and better studied than orofacial clefts, yet the topic of orofacial clefts may have powerful and persuasive effects if incorporated into public health campaigns on the consequences of maternal smoking. The images of faces of disfigured children have been used to establish some of the world's largest medical charity organizations that are devoted to providing free orofacial cleft surgeries in under-served populations. Similar images might prove effective in public health campaigns to protect pregnant women from tobacco smoke and other environmental teratogens.

The association between maternal smoking and orofacial clefts may not be widely appreciated by international health organizations

7.2.2 Maternal alcohol use and craniofacial anomalies

Maternal alcohol use during pregnancy is a well-known cause of the fetal alcohol syndrome. Delegates at the WHO/Utah meeting reported that the occurrence of the fetal alcohol syndrome ranges between 1 per 1000 births in western industrialized countries, 8-10 per 1000 in selected Native (North) American populations, and 108 per 1000 in selected South African populations. The populations at high risk for the fetal alcohol syndrome are almost always impoverished, have easy access to alcohol and, in many cases, have experienced rapid deterioration of their traditional culture and subsistence patterns. The fetal alcohol syndrome represents an extreme example of the effects of maternal alcohol consumption during pregnancy and the pattern of alcohol consumption usually involved – binge drinking – is also extreme. While the characteristic and severe features of the fetal alcohol syndrome are mainly neurologic, resulting in diminished cognitive and behavioural functions, animal and human studies have shown that midline craniofacial anomalies, including orofacial clefts may also occur (Kotch and Sulik, 1992; Johnson et al., 1996).

Women are more commonly exposed to lower levels of alcohol intake during pregnancy than occurs during the binge drinking associated with fetal alcohol syndrome. Alcohol drinking takes place in a variety of social contexts that may include the modifying or confounding effects of diet, smoking and drug use; it is thus understandable why the association between maternal alcohol use and risk of isolated birth defects is not entirely consistent. Maternal alcohol use during pregnancy has been associated with an increased risk of isolated orofacial clefts in some, but not all, studies, as discussed in Section 4.5.2. An examination of the social and dietary context in which alcohol consumption takes place may help to clarify its relationship to orofacial clefts and other CFA. For example, the risk from alcohol consumed while drinking beer at a bar with non-nutritious snacks and exposure to active or passive smoking is not likely to be equivalent to that when the same amount of alcohol is consumed by drinking wine with a nutritious meal. Despite some remaining uncertainties about the relationship between patterns of alcohol consumption and the risk of isolated orofacial clefts, enough evidence exists of a firm causal relationship between maternal alcohol consumption and craniofacial anomalies and other adverse reproductive health effects to warrant strong, worldwide, public health measures to discourage maternal alcohol consumption near the time of conception and during pregnancy.

There is enough evidence of a firm causal relationship between maternal alcohol consumption and CFA

7.2.3 Other maternal exposures related to craniofacial anomalies

Maternal exposures to possible teratogenic medications and chemicals in the workplace and residence were reviewed above in Section 4.5. These teratogens may be critically important to women exposed to them but do not seem as widespread as nutritional deficiencies and tobacco and alcohol exposures; they do not, thus, seem to be ideal choices for broad, population-based, intervention studies. Birth-defect prevention efforts related to medications might ideally be focused on clinical approaches, and occupational exposures to teratogens might best be studied further, with prevention efforts targeted at specific occupational groups.

7.3 Maternal nutrition and orofacial clefts

Adequate nutrition of the mother at the time of conception and in the first trimester of pregnancy appears to be important for the normal development of the lip, palate and other craniofacial structures of the fetus. Much experimental evidence for this view has accumulated from studies of laboratory animals in which specific nutritional deficiencies were induced either by dietary manipulation or by the administration of specific nutrient antagonists. Observational studies of human populations are highly supportive of an important role for maternal nutrition in

normal craniofacial development but, with this approach, it has been difficult to identify the specific nutrients involved because of the high intercorrelation of the many nutrients in multivitamin preparations, fortified foods and healthy dietary patterns. A comprehensive review of laboratory animal and human epidemiologic studies of maternal nutrition and orofacial clefts is available (Munger, 2002). Taken together, the evidence from laboratory animal experiments and human observational studies point to folic acid and vitamin B-6 as leading candidate nutrients that may be useful in the prevention of orofacial clefts, and a lesser body of evidence implicates riboflavin (vitamin B-2) and vitamin A.

7.3.1 Folic acid

The role of maternal dietary folate intake in orofacial clefts has been difficult to determine in human case-control studies

Animal models for the study of folate deficiency as a cause of fetal death, orofacial clefts and other birth defects were first established in the 1940s by Nelson, using a combination of dietary folate deficiency and folate antagonists (Nelson and Evans, 1947; 1949; Nelson et al., 1950). Folate antagonists were eventually found to cause craniofacial and other birth defects in mice, rats and chickens, and folate supplementation was found to prevent orofacial clefts in a breeding line of dogs with a genetic predisposition to orofacial clefts (Elwood and Colquhoun, 1997). Medications that disrupt folate metabolism have been shown in human case-control studies to be associated with an increased risk of birth defects, including orofacial clefts (Hernandez-Diaz et al., 2000). The role of maternal dietary folate intake in orofacial clefts has been difficult to determine in human case-control studies because folates from food sources have a wide range of bioavailability and folic acid supplements are usually taken with other vitamins, minerals and trace elements that may also have protective effects against orofacial clefts. Studies of genetic variation of folate-dependent enzymes may yield clues about the role of folate in orofacial clefts, but to date genetic studies have not altered the current state of equipoise: the MTHFR C677T thermolabile genotype was found to be associated with an increased risk of orofacial clefts in Ireland (Mills et al., 1999) but not in the United States (California) – (Shaw et al., 1998; 1999).

7.3.2 Vitamin B-6

Vitamin B-6 (pyridoxine and closely related compounds) is known to protect against orofacial clefts induced in laboratory animals by teratogens including corticosteroids (Fraser and Fainstat, 1951; Kalter, 1957; Peer et al., 1958; Bonner and Slavkin, 1975; Melnick et al., 1981), vitamin A excess (Yamaguchi, 1968), cyclophosphamide (Dostal and Schubert, 1990), and beta-aminoproprionitrile (Jacobsson and Granstrom, 1997). Deoxypyridine, a vitamin B-6 antagonist, was shown to induce orofacial

clefts (Miller, 1972) and vitamin B-6 deficiency alone was sufficient to cause cleft palate and other birth defects in mice (Davis et al., 1970). Less information is available from human studies on the possible role of vitamin B-6 in orofacial clefts *(see Section 4.4.1)*.

In a case-control study in the Netherlands, mild maternal homocysteinemia was associated with an elevated risk of nonsyndromic orofacial clefts (Wong et al., 1999). Biochemical studies revealed that case-mothers had lower levels of whole blood vitamin B-6 (measured as pyridoxal-5'-phosphate) compared to controls; no differences were found in levels of serum vitamin B-12 and case-mothers had higher levels of serum and red-cell folate compared to controls. Thus, in the Netherlands poorer vitamin B-6 status was associated with a higher risk of orofacial clefts and one possible mechanism may have been elevated homocysteine levels in mothers with poorer vitamin B-6 status.

The worldwide occurrence of vitamin B-6 deficiency is not well described although it is known to be a regional problem in poorer populations of Asia where highly polished rice is the dietary staple and few other dietary sources of vitamin B-6 are available (Bamji et al., 1979). These populations also appear to have elevated rates of orofacial clefts. Vitamin B-6 deficiency is also induced by use of certain medications, including isoniazid for the treatment of tuberculosis, and oral contraceptives (Sauberlich et al., 1972).

7.3.3 Riboflavin (vitamin B-2)

Riboflavin (vitamin B-2) deficiency was found by Warkany in the 1940s to cause skeletal malformations and orofacial clefts in laboratory rats (Warkany and Nelson, 1940). In further studies of the timing of deficiencies during gestation, Warkany found that riboflavin supplementation before Day 13 prevented the malformations but later supplementation did not, thus establishing the principle of a critical period in embryonic development for the susceptibility to nutritionally-induced birth defects (Warkany, 1954). Further studies by others confirmed that riboflavin deficiency caused birth defects in rats (Noback and Kupperman, 1944; Giroud and Boisselot, 1947; Leimbach, 1949; Piccioni and Bologna, 1949; Giroud and Boisselot, 1951), mice (Kalter and Warkany, 1957), and fowl (Lepkovsky et al., 1938; Romanoff and Bauernfeind, 1942).

Despite the findings that riboflavin deficiency caused orofacial clefts and other birth defects in laboratory animals, it does not seem to have been the subject of research in studies of human orofacial clefts. This is an important gap in current knowledge because riboflavin deficiency is one of the most common vitamin deficiencies worldwide (Sauberlich, 1984); it commonly co-occurs with vitamin B-6 deficiency (Bamji et al., 1979) and is closely interrelated with vitamin B-6 metabolism (Sauberlich, 1999).

7.3.4 Vitamin A

Both excessively high and low levels of vitamin A intake during pregnancy have been associated with an increased risk of orofacial clefts and other craniofacial anomalies. Hale was the first to report that maternal vitamin A deficiency caused eye defects, orofacial clefts and other birth defects in experiments with pigs (Hale, 1933; 1935). Human vitamin A deficiency is widespread, especially in developing countries around the world (West et al., 1999). Birth defects related to vitamin A deficiency may be unnoticed in impoverished populations because of the larger burden of other health problems. In a case-control study in Japan maternal consumption of vegetables rich in the plant form of vitamin A, ß-carotene, was associated with a reduced risk of CL/P (Natsume et al., 1999).

Most subsequent research on vitamin A-related compounds and craniofacial anomalies in laboratory animals has involved excess exposure to retinoic acid and other retinoids (Kochhar et al., 1984; Abbott and Pratt, 1988; Abbott and Birnbaum, 1990; Whitby et al., 1994; Soprano and Soprano, 1995; Ross, 1999). Human clinical studies have revealed that fetal exposure to retinoid compounds may result in severe craniofacial anomalies (Lammer et al., 1985) and dietary exposures to high levels of vitamin A may also be important. In a prospective study of more than 22 000 births to women in the United States, craniofacial anomalies and other malformations were more common in women who consumed more than 10 000 IU of vitamin A in the peri-conceptional period (Rothman et al., 1995).

7.4 Nutritional supplementation

BOX N

Trials of maternal nutritional supplementation and orofacial clefts

Several attempts have been made to conduct human trials to evaluate maternal vitamin supplementation during pregnancy as a means of preventing orofacial clefts; these were first motivated by the seemingly promising results of experiments in laboratory animals. The first published reports appeared in 1958 and described attempts in the United States to give mothers supplementary multivitamins but the studies were very small; few methods and no statistical analyses were reported (Conway, 1958; Douglas 1958; Briggs, 1976). Other attempts at vitamin supplementation trials for the prevention of orofacial clefts were attempted in Europe (von Krebig and Stoeckenius, 1978; Schubert et al., 1990) and these authors made claims for the effectiveness of the treatments, yet each of these studies also had insufficient data to allow an evaluation of the results.

7.4.1 The Czech orofacial-cleft prevention trial

Tolorova et al. began a trial of vitamin supplementation for the prevention of orofacial clefts in high-risk Czech women in 1976 (Tolarova, 1982). High-risk mothers were defined as those who had given birth to a child with a cleft or who had a cleft themselves. Participating mothers were advised to take a multivitamin preparation daily, during the period three months before conception until the end of the first trimester. The daily multivitamin dose included:

vitamin A (6000 IU),
vitamins B-1 (3 mg), B-2 (3 mg), B-6 (3 mg),
vitamin C (150 mg),
vitamin D (300 IU),
vitamin E (6 mg),
nicotinamide (30 mg),
calcium pantothenate (3 mg), and
folic acid (10 mg).

The exclusion of non-compliant participants in a clinical trial may seriously bias the results

The "treated" mothers were those who accepted supplements and the "controls" were those who refused or failed to comply. Results reported in 1982 revealed that 1 of 85 "supplemented" pregnancies and 10 of 212 "unsupplemented" pregnancies were affected with orofacial clefts (Tolarova, 1982). Later updates (Tolarova, 1987; Tolarova and Harris, 1995) revealed that 3 of 211 "supplemented" pregnancies and 77 of 1824 "un-supplemented" pregnancies were affected with orofacial clefts (Fisher exact p-value, one-sided test, $p = 0.03$; two-sided test, $p= 0.058$). Important limitations of the Czech study include lack of random assignment of mothers to the treatment and control groups and exclusion of non-compliant participants from the analyses. The mothers in the supplement-treated group received additional interventions that the control group did not receive, including advice to conceive in the late spring and summer months because of the greater availability of fresh fruit and green vegetables and a lesser risk of respiratory tract infections. The exclusion of non-compliant participants in a clinical trial may seriously bias the results, even if the trial begins with random assignment; this is the basis for "intention-to-treat" analyses in the design of modern clinical trials (Meinert, 1986). Because of these design limitations and the lack of statistical significance, the results of the Czech trial are not interpretable.

7.4.2 The Hungarian birth-defects prevention trial

The Hungarian Family Planning Program (HFPP) was the setting used by Czeizel and colleagues for a clinical trial to test the efficacy of peri-conceptional multivitamin supplementation in the primary prevention of birth defects (Czeizel and Dudas, 1992; Czeizel, 1993a, b; Czeizel et al.,

1994; Czeizel and Hirschberg, 1997; Czeizel, 1998; Czeizel et al., 1999). Participating women were given genetic counselling, and health advice regarding nutrition, smoking and alcohol use. The inclusion of health education on known reproductive hazards for all participants in the trial is laudable and is an early example of the provision of minimum local standards of care in a trial, an ethical issue that has emerged in more recent discussions. Participating women were randomly assigned to receive either a multivitamin or a trace-element tablet daily for the period one month before conception, until the third month of gestation. The trial was double-blind. The multivitamin contained:

vitamins A (6000 IU until 1989 and 4000 IU thereafter),
B-1 (1.6 mg), B-2 (1.8 mg), B-6 (2.6 mg), B-12 (4 ug),
C (100 mg), D (500 IU), E (15 mg);
folic acid (15 mg);
nicotinamide (19 mg);
calcium pantothenate (10 mg);
biotin (0.2 mg);
four minerals, including calcium (125 mg), phosphorus (125 mg), magnesium (100 mg) and iron (60 mg); and
three trace elements, including copper (1 mg), manganese (1 mg) and zinc (7.5 mg).

A trial of primary prevention must have a larger sample size than a recurrence-prevention trial to demonstrate a given treatment effect

The trace-element control group took a tablet with the same amounts of copper, manganese and zinc, with the addition of vitamin C (7.3 mg) and lactose (736 mg). Based on an "intention-to-treat" analysis, there was a significant reduction in NTDs (0 in 2471 vitamin-supplemented pregnancies versus 6 in 2391 trace-element-only treated pregnancies; $p = 0.02$), but no significant difference between the treatment groups was observed in the occurrence of a small number of orofacial clefts (4 among the vitamin-supplemented group and 5 in the trace-element-only supplemented pregnancies; $p = 0.57$) (Czeizel, 1998; Czeizel et al., 1999). Thus, the Hungarian trial showed a significant protective effect of multivitamins in reducing the primary occurrence of NTDs, but the trial was too small to determine whether or not multivitamin use prevented orofacial clefts. The Hungarian trial underscores the point that a trial of primary prevention must have a larger sample size than a recurrence-prevention trial to demonstrate a given treatment effect. Another difficulty in interpreting the lack of a treatment effect for orofacial clefts in the Hungarian trial is that the control group received trace elements, including copper and zinc, that may have lowered the risk of orofacial clefts, thus possibly obscuring a treatment effect in the multivitamin group.

7.4.3 Prevention trials

BOX 0

Future directions for orofacial-cleft prevention trials

The trials of maternal nutritional supplementation for the prevention of orofacial clefts conducted to date have been uninformative because of inadequate sample sizes and methodologic flaws. Further understanding of maternal nutrition and orofacial clefts will require that specific nutritional hypotheses and state-of-the-art trial design be applied in appropriate high-risk populations. Investigators interested in birth defects prevention would benefit from collaboration with others involved in prevention trials in different areas of reproductive health. Professor Keith West spoke at the WHO/Utah meeting about his experience in conducting large-scale nutritional intervention studies related to maternal and child health in Bangladesh, Indonesia, Nepal, the Philippines and Thailand. His most recent trial assessed the effect of vitamin A supplementation in reducing mortality related to pregnancy in women of reproductive age in a rural and undernourished population in Nepal. Nearly 45 000 women participated in the double-blind, cluster-randomized, placebo-controlled trial and over 22 000 pregnancies were followed. The results of the trial showed that supplementation to women of reproductive age with either preformed vitamin A or beta carotene in recommended dietary amounts significantly lowered mortality related to pregnancy (West et al., 1999). The Nepalese trial and others like it have studied reproductive outcomes such as maternal and infant death, prematurity and low birth weight – factors that are far more common than birth defects, in general, or orofacial clefts in particular.

One of the most difficult challenges in future orofacial-cleft prevention trials will be in recruiting many thousands of high-risk women in their reproductive years. These efforts will lead investigators to high-risk populations in culturally and economically diverse settings. This important research must be done according to current ethical standards – and this is not a straightforward issue because ethical standards continue to evolve and no single set of ethical standards is applicable in every setting around the globe. The lively discussion at the WHO/Utah meeting on appropriate ethical standards for prevention trials for human orofacial clefts reflected the larger sphere of international debate on ethical standards for human experimental trials.

7.5 Ethical issues

BOX P

Ethical issues related to studies of maternal nutrition and birth defects

Professor Richard Smithells, one of the founders of studies of the role of folic acid in human neural tube defects, gave a personal account at the WHO/Utah meeting of the early stages and evolution of his involvement in this area of research. Smithells faced many dilemmas because his personal convictions and dedication to patients collided at times with the mandates of ethical review boards, the opinion of colleagues, and the popular press. At an earlier stage he was not allowed to proceed with a correct randomized trial of folic acid for the prevention of neural tube defects. Later, however, when he was personally convinced that folic acid could prevent neural tube defects and had hence lost his state of equipoise, ethical review boards and health officials in the United Kingdom had become convinced that the time for a randomized, controlled clinical trial had arrived. Professor Smithells believed ethics were very personal and individual; relative rather than absolute. This view was echoed later by many of the meeting delegates.

Professor Smithells recognized the need for "someone else" to conduct the definitive trial of folic acid supplementation for the prevention of recurring neural tube defects and stepped aside. He listed several lessons he learned from this experience:

(1) What you judge to be ethical or unethical depends on what you believe – ethics are perhaps relative rather than absolute.

(2) If a thing is worth doing, it is worth doing properly – and that means getting it right the first time around if you can. If a randomized trial is possible – and it isn't always – it is to be preferred.

(3) The more circumstantial evidence there is that something works, especially from non-randomized or uncontrolled studies, the more difficult it is to launch a randomized study later. If you spend too long snapping at the heels of a problem, you may lose the opportunity to "go for the jugular and sort it out in one".

7.5.1 Ethical guidelines for research involving human subjects in orofacial-cleft prevention trials

Professor Robert J. Levine reviewed recent developments and current controversies in the international guidelines involving human subjects in research, with a focus on the recent revisions of the *Declaration of Helsinki* by the World Medical Association (WMA, 2000) and the 2001 draft revisions of the *International Ethical Guidelines for Biomedical Research Involving Human Subjects* by the Council for International Organizations of Medical Sciences (CIOMS, 2001). Professor Levine pointed out that problems inherent in the *Declaration of Helsinki* include an artificial distinction between therapeutic and non-therapeutic research and outdated views of contemporary ethical thinking, particularly in the area of placebo controls. This situation has led to widespread debate and has prompted the WMA and CIOMS to revise their recommendations (current drafts are available on the web sites of these groups). The discussions of placebo and control groups at the Utah/WHO meeting paralleled the broader international debates, with many divergent views being expressed on the basic definitions of placebo and control groups and their proper use.

A complete discussion of ethical issues related to biomedical research in general and to prevention trials in particular was beyond the scope of the WHO/Utah meeting and these topics are covered in detail in the references cited above. There was, however, detailed discussion on several ethical aspects of orofacial-cleft prevention trials, relating to the development of nutritional intervention trials for the prevention of orofacial clefts in industrialized and technologically developing countries and resource-poor populations. The following summary of ethical issues is a result of the presentations made by Professors Levine and Smithells, and discussions with the meeting delegates.

7.5.2 Equipoise

BOX Q

Equipoise

A fundamental requirement for the justification of a clinical or community-based intervention trial is a recognized state of uncertainty or unresolved dispute among expert clinicians and researchers regarding which therapeutic or preventive measures are superior. The term ***equipoise*** is often used to describe the state of equilibrium between view points. The requirement for equipoise before embarking on a trial should be most stringently applied when the treatments or interventions being tested are for lethal or disabling medical conditions (World Medical Association, 2000; Council for International Organizations of Medical Sciences, 2001).

The balance of equipoise is usually tipped by the accumulation of results from many separate studies

Chalmers described the ideal conditions for an ethical clinical trial as a test of the perfect null hypothesis in which individual physicians have no idea as to whether a treatment is better than a placebo or if two alternative treatments differ in effectiveness (Chalmers, 1978; 1979). Freedman derided this view, labelling it ***theoretical equipoise,*** and proposed as a replacement the term ***clinical equipoise*** to describe the situation where both risks and benefits were considered as critical parts of the justification for a clinical trial (Freedman, 1987). Freedman allowed that individual clinicians may differ in their judgements about alternative treatments yet ideally join together in a trial to resolve the dispute; the situation described earlier by Professor Smithells regarding neural tube defects and folic acid supplementation is an example of this situation. The common purpose is to develop compelling evidence that one treatment is better than another (or better than placebo) so that other physicians and scientists who have not participated in the trial will be convinced of the results and change their pattern of practice. Unambiguous results are also needed to convince elected officials of the need to change public health policies through acts of legislation.

The information needed to establish a state of equipoise includes data from animal experiments, observations from human case-control and cohort studies, and evaluation of previous trials, if they exist. Professor Meinert pointed out that, in most of the important controversies in medicine and public health, there has been no single, definitive trial and the balance of equipoise is usually tipped by the accumulation of results from many separate studies.

7.5.3 Appropriate study design and ethics

The Helsinki and CIOMS guidelines begin from the position that all studies involving human subjects must conform to generally accepted scientific principles, be based on a thorough knowledge of scientific literature, and employ the latest advances in study design and practice. Ethical review cannot be separated from review of study design and scientific methods. Research that is unsound or deficient because of lack of statistical power to detect treatment effects will not only result in a waste of the participants' time and the resources of sponsoring agencies but will also expose the participants to risk, even if slight, without the prospect of benefits. Further discussion of trial design, important in advancing knowledge of the prevention of orofacial clefts, appears in Section 7.6 below.

Ethical review cannot be separated from review of study design and scientific methods

7.5.4 Local health priorities and applications of findings

Sponsoring agencies and investigators should make every reasonable effort to ensure that a prevention trial is responsive to the health needs and priorities of the participating local populations and that the intervention can and will be made available to the local populations within a reasonable period of time. These considerations become especially important in populations or communities with limited resources. According to the CIOMS guidelines it is not sufficient to justify a prevention trial because of a high prevalence of the health condition of interest; it is also necessary that the intervention being studied, if found to be beneficial, could reasonably be introduced into the local population at the conclusion of the study. If the intervention being evaluated, such as nutritional supplementation, is too expensive or impractical to distribute in the population participating in the trial, and if the knowledge gained about the intervention is used to benefit other populations that have the resources to employ the intervention, then the study is exploitative and therefore unethical (CIOMS, 2001). Detailed baseline studies are needed to describe local health priorities, common maternal and child health problems, the birth prevalence of orofacial clefts and other important birth defects; dietary patterns and biochemical studies are needed as a baseline measure of maternal nutritional status. In most populations half – or more – pregnancies are not precisely planned, therefore nutritional interventions should have the potential to be introduced via dietary improvements and food fortification in the population at large to improve intake of vitamins in the peri-conceptional period. In most populations the more clinical approach of providing nutritional supplements in pill form will not reach a significant number of women in the peri-conceptional period; some notable exceptions however have included China and Hungary, and other areas where family planning and prenatal health care receive strong cultural and governmental support.

7.5.5 Selection of research subjects

The benefits and burdens of intervention trials and other research should be equitably distributed both within and between populations. According to CIOMS Guideline 12 "no group or class of persons should be required to bear more than its fair share of the burdens of participation in research; similarly, no group should be deprived of its fair share of the benefits of research" (CIOMS, 2001). In some areas it is possible that certain groups have been overused as study subjects where research institutions have had access to local patient populations. This is a particular concern when it is easy to recruit impoverished persons as research subjects because they are willing, due to their desperate condition, to participate – in exchange for a trivial (from the viewpoint of the sponsor) payment. This is a larger concern for pharmaceutical trials conducted among the poor – especially when the results are used to benefit wealthier populations, than for investigations of the specific conditions of the poor, as in studies of malnutrition and nutritional deficiencies in populations with a high risk of orofacial clefts.

7.5.6 Placebos and other control treatments

According to Article 29 of the *Declaration of Helsinki* (WMA, 2000):

> "the benefits, risks, burdens, and effectiveness of a new method should be tested against those of the best current prophylactic, diagnostic, and therapeutic methods. This does not exclude the use of placebo, or no treatment, in studies where no proven prophylactic, diagnostic or therapeutic method exists."

Professor Levine pointed out that a major weakness of the Helsinki guidelines is that trials appear to be ruled out in resource-poor countries if the standard of "best current method" is mandated as the control treatment yet is not locally available due to scarcity, high cost, or both (Levine 1999; 2000). According to Levine, this weakness in the Helsinki guidelines is the root of the most bitter controversy in research ethics over the past 30 years, precipitated by the trial of a short duration AZT regimen in the prevention of perinatal transmission of HIV-infected pregnant women. The medication that was the "best available method" at that time in industrialized countries cost 80 times the annual per capita health expenditure in sub-Saharan countries; and this cost did not take into account the advanced medical resources required to administer the medication. As early as 1993 this dilemma led to the recognition that an absolute standard of "best available treatment" could not be applied worldwide and that special arrangements had to be made for trials in low-resource countries. The CIOMS guidelines (CIOMS, 2001) now recognize that there are circumstances in which use of a control treatment other than the "best current method" is justified if:

(1) the scientific and ethical review committees in both the country of the sponsoring institution and the host country determine that use of the "best current method" as a control would be likely to invalidate the results of the research or make results inapplicable in the host country;

(2) plans to make the therapeutic product reasonably available in the host country or community are securely established; and

(3) a process of planning and negotiation, including justification of a study in regard to local health-care needs, has taken place with the health authorities in the host country before the research begins.

There is currently no nutritional intervention for women that is known to prevent orofacial clefts in their offspring

The three most important micronutrient deficiencies worldwide – iron, vitamin A and iodine – are causes of maternal and child illness and death, overwhelmingly greater in number than those affected by birth defects. Iron, vitamin A, and iodine are inexpensive in industrialized countries, yet scarce and difficult to distribute in resource-poor countries, underscoring the point that nutritional interventions face ethical dilemmas similar to those raised in the case of the AZT trials for the prevention of perinatal HIV transmission in Africa.

Folic acid supplementation for women in all populations appears to be the "best current method" of peri-conceptional care for the prevention of neural tube defects in industrialized countries but appears difficult to implement in many low-resource countries with health agendas crowded with a growing number of recommended health-related interventions.

There is currently no nutritional intervention for women that is known to prevent orofacial clefts in their offspring. At first glance this seems to be the ideal state of clinical equipoise, making the test of a nutritional intervention versus placebo timely. The issue becomes complicated quickly when folic acid supplementation, known to reduce the risk of neural tube defects in several populations, is proposed as a preventive intervention to reduce the occurrence of orofacial clefts. Many of the delegates at the WHO/Utah meeting felt that any study that did not provide 400 micrograms of folic acid per day to all mothers was unethical because folic acid would be "withheld" from mothers and they would be at higher risk of having a child with a neural tube defect. Some delegates extended the view that folic acid supplementation was mandatory for women participating in birth defect studies of any design, including observational cohort studies. Others felt that public health action to provide folic acid to women of reproductive age (and many other nutrients important to reproductive health) was well under way through public health campaigns to increase dietary intake of folates and folic acid-containing vitamins in the peri-conceptional period and through food fortification (in Chile, the United States and a growing number of other countries). Thus placebo-controlled

studies of higher levels of folic acid supplementation, as an "add-on" study to the increasing baseline intake of folic acid, was viewed by other delegates as ethical.

The use of placebos is currently being debated by the WMA and CIOMS and the delegates at the WHO/Utah meeting were not successful in reaching a consensus either – indeed the basic definition of a placebo was not even widely agreed upon. Some investigators have added to their "placebo" other vitamins, minerals, trace elements, vaccinations, or treatments for parasites – each thought to be unrelated to the condition under study – as a way to provide some inducement for participation, even though the real benefits may have been difficult or impossible to quantify. This kind of comparison becomes difficult to interpret if later evidence arises that one of the additives to the "placebo" group indeed alters the risk of the outcome under study; if this is the case then the "placebo" is really an active control treatment. In a nutritional supplementation trial a strict placebo would include no active compounds and would be identical in appearance to the hypothesized active treatment, in most cases a pill or an injection. Anything else that is compared to a hypothesized active treatment should be referred to as an active control treatment (Meinert, 1996). In the Hungarian birth defects prevention trial the group actively treated with multivitamins was compared to a "trace element control" group that received a tablet with the same amounts of copper, manganese and zinc as the "active treatment" group received, but with the addition of vitamin C and lactose. The Hungarian study thus did not employ a true placebo-control group and concerns have been raised that, since zinc nutriture might be related to the risk of birth defects and zinc was provided to both groups, the occurrence of NTDs (and perhaps orofacial clefts and other birth defects) may have been reduced in both groups, obscuring the treatment effect of the other nutrients. The trial of the Medical Research Council (MRC) trial to prevent NTDs employed a control group that received tablets with iron and calcium (without the main "active" treatments compared, folic acid alone or folic acid plus multivitamins) rather than a true placebo control group. This was recently criticized by Turner (Turner et al., 2001) who speculated that exposure to high levels of iron and calcium (among control mothers who took more than one pill per day) may have interfered with zinc nutriture and raised the risk of NTDs. Turner's re-interpretation of the MRC results has been disputed by Moore (Moore, 2001). An important lesson from this experience is that investigators should rigorously define their control groups or risk endless re-interpretations of their study findings.

The use of control groups in nutritional intervention trials is thus complex and there is no global consensus on the precise guidelines for their use

The use of control groups in nutritional intervention trials is thus complex and there is no global consensus on the precise guidelines for their use. Investigators designing trials should follow the general principles regarding control treatments outlined in the *Declaration of Helsinki* and clarified by the CIOMS guidelines, but should decide on the appropriateness of control groups in consultation with the institutional review boards representing the sponsoring institutions and local populations participating in the study.

7.5.7 Standard of care

BOX R

Highest attainable and sustainable standard of care

In response to the deep divisions over the ethics of HIV-prevention trials among pregnant women in resource-poor countries and other similar dilemmas, a new standard of care for therapeutic methods in clinical trials has emerged in recent revisions of the Helsinki and CIOMS ethical guidelines: the "highest attainable and sustainable therapeutic method" (Lurie et al., 1994; Aaby et al., 1997; Levine, 1999; 2000; WMA, 2000; CIOMS, 2001). Professor Levine has recently published a detailed analysis of these developments (Levine, 1999; 2000) and discussed this at the WHO/Utah meeting.

"Highest attainable" therapy means that under the conditions of a clinical or community-based intervention trial, the level of therapy in the given location should be "the best one can do." The level of care available in a resource-poor population should define the minimum ethically-acceptable standard. "Sustainable" means the level of care, medical treatment, or nutritional supplementation that can be expected to be maintained by the local population after completion of the trial. These new standards are closely linked to the principles of addressing local health priorities in a research programme and ensure the application of the findings of the trial in the local population. The introduction of interventions of therapies that are not locally available and sustainable may undermine local health services and priorities. According to Levine, the main benefit of adhering to the standard of available and sustainable therapies "tends to facilitate the efforts of resource-poor countries to develop needed therapies and preventions that are within their financial reach. Until the imbalances in the distribution of wealth among nations of the world are corrected, this appears to be the best we can do" (Levine, 2000).

7.6 The design of orofacial-cleft prevention trials

Timing is the essence of an intervention trial because the state of equipoise may be a narrow window of opportunity. A feeling of urgency however should not lead investigators to start assigning treatments to participants until the infrastructure is in place and the study protocol is developed, data forms are established and tested, field staff are hired and trained for participant recruitment, data intake and analyses, and a mechanism has been established to independently monitor the trial (Meinert, 1986). No single trial is likely to be definitive and trials are needed in diverse populations in both industrialized and technologically developing countries.

7.6.1 Selection of the study population

Trials in high-risk populations are more likely to detect a treatment effect than trials in low-risk populations, and at lower cost and with greater speed. A recurrence-prevention trial of orofacial clefts in a high-risk population will still require that several thousand births are evaluated; a primary prevention trial would require tens of thousands of births. For planning a trial, baseline studies of cleft occurrence and recurrence are needed, as well as a good sense of whether the local population is willing to participate in a trial.

7.6.2 Specification of the test treatment or treatments

The choice of a specific nutrient intervention or interventions should be based on prior laboratory animal studies, observational studies of human populations, and detailed studies of biochemical indicators of nutritional status in the population of interest. The investigators must consider whether the goal of the study is to investigate dose levels of nutrients to correct inadequate dietary intake or higher pharmacological doses that might be necessary to overcome acquired or genetically-based metabolic problems. Well-targeted nutritional hypotheses will have greater public health benefits than the broad approach of multivitamin supplementation because knowledge of the specific nutrients involved could lead to food-based interventions that would ultimately reach a far greater number of women of reproductive age than programmes to encourage the use of supplements in the peri-conceptional period would. Factorial and dose-response study designs are highly efficient ways to answer several complex questions about multiple treatments and doses in a single trial.

7.6.3 Specification of the placebo or other control treatment

Many investigators may be tempted to avoid the difficult issues regarding the use of placebo controls or active treatment controls discussed above by attempting to make comparisons between participants receiving the test treatment and so-called "historical controls" (untreated persons from an earlier time period in the same geographic area) or "geographic controls" (untreated persons from a different geographic area in the same time period). Use of historical or geographic controls almost always leads to unclear findings and confusion, thus should be avoided. The use of placebos and active treatment controls was discussed in detail previously.

7.6.4 Outcome measure for evaluating the study treatment

Orofacial clefts appear to be the only group of CFA to be common enough at present for a trial. Since cleft lip with or without cleft palate seems to be etiologically distinct from cleft palate alone, a trial should have its primary focus on one group or the other. The issue of detecting and evaluating early pregnancy losses should be carefully considered.

7.6.5 Bias-free method for assigning patients to the study treatments

Test and control treatments should be randomly assigned to participants. In the assignment of treatments, "haphazard" does not equal "random" thus formal mechanisms should be in place and monitored to assure true random assignment of treatments.

7.6.6 Double masking of treatment status

The treatment status should be concealed from participants and investigators to avoid bias in the attention given to each participant. Because curiosity seems to be a universal human trait, even the most dedicated co-investigators and field staff may be tempted to decipher the treatment allocations, thus much attention should be given to this issue.

7.6.7 Monitoring

An independent data, safety, and monitoring committee (DSMC) should be established to regularly review progress of a trial. This committee should have access to all information gathered in the trial, including the treatment allocations of participants. Side-effects and compliance of participants should be closely monitored by the trial field staff and study investigators and reported to the committee.

7.6.8 Analysis by assigned treatment

Investigators should analyse and report results according to the original treatment assignment of participants. This is the only analytical approach that is compatible with the randomized design and it avoids treatment-related selection bias in the composition of the treatment groups. Analysis by assigned treatment provides a conservative and realistic measure of the treatment effect that remains after losses due to participant or health-care provider rejection of the treatments.

7.7 Conclusions

7.7.1 Environmental and behavioural factors related to CFA

Craniofacial anomalies are among the most common birth defects and, of these, orofacial clefts are the most common. Most discussions in the WHO/Utah meeting focused on orofacial clefts but the points raised may be relevant for many other craniofacial anomalies. Orofacial clefts appear to have substantial environmental causes, thus the potential for primary prevention seems considerable. The pattern of occurrence of orofacial clefts is different from that for neural tube defects therefore their causes may also be different.

7.7.2 Tobacco

Maternal tobacco use has been consistently associated with risk of orofacial clefts. This association is modest, yet the attributable risk may be of public health importance because many women are exposed to passive smoking and tobacco use is rapidly increasing among women, especially in technologically developing countries. National health agencies and voluntary organizations may be unaware of the association between maternal tobacco use and orofacial clefts.

7.7.3 Alcohol

Maternal alcohol use has been associated with risk of orofacial clefts in some – but not all – studies. The type and context of alcohol consumption differs considerably across populations and more consistent methods are needed for the assessment of maternal alcohol intake.

7.7.4 Maternal nutrition and orofacial clefts

There is considerable circumstantial evidence that maternal nutritional factors may be related to the occurrence of orofacial clefts, the most common of CFA. The most promising candidate nutrients include folic acid and vitamin B-6 (pyridoxine) and a lesser body of evidence suggests roles for riboflavin (vitamin B-2) and vitamin A.

7.7.5 The need for nutritional supplementation trials

The current state of equipoise regarding maternal nutrition and orofacial clefts makes intervention trials of specific nutrients an urgent priority. Further understanding of the role of maternal nutrition in CFA will require well designed and expertly conducted trials. No single trial is likely to be definitive and trials are needed in diverse populations in industrialized and technologically-developing countries and resource-poor populations.

7.7.6 Ethics and design of orofacial-cleft prevention trials

Poorly conceived and conducted trials are unethical because they waste limited resources and further delay the discovery of effective interventions. Intervention trials should employ strict random assignment of participants to treatment groups, include either a placebo or other appropriate control group, include an adequate sample size, be double-masked, monitored by an independent data and safety committee, employ intention-to-treat analyses, and use appropriate procedures to obtain informed consent from each participant. Comparison of an active treatment group to "controls" from a different time period or geographic location is unlikely to yield an interpretable result. Trials in high-risk populations are not only more likely to detect a treatment effect than trials in low-risk populations, but also at lower cost and with greater speed. The choice of nutrient interventions should be based on prior detailed studies of biochemical indicators of nutritional status in the population of interest.

7.7.7 International cooperation

BOX S

Role for WHO, governmental agencies and non-governmental organizations

An orofacial-cleft recurrence-prevention trial is far more feasible than a trial of prevention of primary occurrence, but will still require many thousands of high-risk mothers. Orofacial cleft surveillance systems and registries need to be further developed and linked to provide the critical infrastructure for orofacial-cleft prevention trials. A current and urgent need is linkage of existing birth defects registries, harmonization of methods of data collection and data management, and the development of these activities in technologically-developing countries and resource-poor populations. Public health action is needed on other fronts as research on the causes of CFA continues. The association between maternal smoking and alcohol use during pregnancy and the risk of orofacial clefts is strong enough to warrant inclusion of this information in public campaigns to reduce exposure to these teratogens in women of reproductive age.

8 Conclusions and recommendations

After thorough discussions of the many initial options, the following major themes were proposed:

8.1 Treatment of CFA

Three interrelated research issues were addressed within the clinical theme.

8.1.1 Evidence-based care

This issue focuses on the replacement of current widespread uncertainty and confusion in clinical care with a sound evidence-base derived from rigorous clinical research.

There is a pressing need to mobilize a critical mass of clinical research expertise and to access sufficiently large samples of patients for adequately-powered clinical trials. Initial efforts should include the following:

- trials of surgical methods for the repair of different orofacial cleft subtypes, not just unilateral clefts;
- trials of surgical methods for the correction of velopharyngeal insufficiency;
- trials of the use of prophylactic ventilation tubes (grommets) for middle-ear disease in patients with cleft palate;
- trials of adjunctive procedures in cleft care, especially those that place an increased burden on the patient, family, or medical services, such as presurgical orthopaedics, primary dentition, orthodontics and maxillary protraction;
- trials of methods for the management of perioperature pain, swelling and infection, and nursing;
- trials of methods to optimize feeding before and after surgery;

- trials addressing the special circumstances of care in the developing world in respect of surgical, anaesthetic and nursing care;
- trials of different modalities of speech therapy, orthodontic treatment and counselling.

Equally urgent is the need to create collaborative groups, or improve the networking of existing groups, in order to develop and standardize outcome measures. There is an especially urgent need for work on psychological and quality-of-life measures, and economic outcomes.

For rare interventions, prospective registries should be established to hasten collaborative monitoring and critical appraisal, equivalent to Phase I trials. Relevant topics would be craniosynostosis surgery, ear reconstruction, distraction osteogenesis for hemifacial macrosomia and other skeletal variations, midface surgery in craniofacial dysostosis, and correction of hypertelorism.

8.1.2 Quality improvement

Quality improvement focuses on the development and dissemination of methodologies for monitoring and improving the delivery of clinical services.

The international adoption of a set guideline for the provision of clinical services and for the maintenance and analysis of minimum clinical records of cleft care is proposed. Various registries of clinical outcomes have recently emerged and are working independently. Efforts should be made to harmonize these.

8.1.3 Access and availability

Identify strategies to maximize access to adequate levels of care for all affected individuals, irrespective of nationality.

In large parts of the world, routine public health services are unable to afford treatment for CFA. Three general approaches can be identified: high volume indigenous centres of excellence; contracts between non-governmental organizations (NGOs) and local hospitals; and volunteer short-term surgical missions. The long-term benefit of these efforts could be developed by:

- a survey of the charitable organizations involved and the scale of their work;
- an appraisal of the cost-effectiveness and clinical effectiveness of the different models of aid;

- the promotion of dialogue between different NGOs to develop commonly-agreed codes of practice and adoption of the most appropriate forms of aid for local circumstances, with an emphasis on support that favours indigenous long-term solutions;
- the initiation of clinical trials concerning the specifics of surgery in a developing country setting, one-stage operations, optimal late primary surgery, anaesthesia protocols (e.g. local anaesthetic, inhalation sedation), antisepsis;
- the development of common core protocols for genetic, epidemiological and nutritional studies alongside surgery.

8.2 Gene/environment interaction

8.2.1 Epidemiology

The overall conclusions to be drawn from the data presented are as follows:

- there is ample evidence of the distinctly different nature of CL/P and CP, and emerging evidence of distinct differences in sub-groups within these overall conditions;
- there is a great deal of geographical variation which is more apparent for CL/P than CP;
- there is considerable variation in the proportion of cases of OFC with additional congenital anomalies and syndromes;
- it is evident that migrant groups retain rates of CL/P similar to those of their area of origin;
- there is no consistent evidence of time trends, nor is there consistent variation by socioeconomic status or seasonality, but neither of these aspects have been adequately studied;
- there is considerable international variation in the frequency of orofacial clefts, but validity and comparability of data are adversely affected by numerous factors, among which are:
  (a) source population of births considered (hospital versus population),
  (b) time period,
  (c) method of ascertainment,
  (d) inclusion/exclusion criteria, and
  (e) sampling fluctuation;
- there are many parts of the world where we have little or no information on the frequency of OFC, in particular parts of Africa, Central Asia, Eastern Europe, Middle East and Russia.

8.2.2 Etiology

The following points are relevant:

- there are multiple genes involved in OFC;
- analysis should be separated for CL, CL/P and CP as CL/P is not the same as CL only;
- heterogeneity should be expected and therefore different populations will need to be examined for validation of a result;
- nutrition remains an eligible area for research, and the roles of folic acid and multivitamins, including folic acid, vitamins A, B2, B6 and B12, as well as zinc, need further investigation;
- smoking, alcohol, epilepsy, certain medications and environmental factors may explain a small but appreciable portion of birth defects;
- main gaps in knowledge are examination of co-teratogens and gene/environment interaction e.g. with alcohol are there co-teratogens, such as folate deficiency, and is there a threshold beneath which alcohol is safe?

It is important to be able to differentiate the exposure and the genetic predisposition; and identify those at risk to allow selective counselling since general advice regarding alcohol and smoking in relation to disease is not easy to impart in attempting to achieve changes in behaviour.

One major issue in the reporting of associations with exposures is the distinct possibility of publication bias in the literature.

8.2.3 WHO aims and objectives for gene/environment interaction research

The ultimate humanitarian and scientific research objective in CFA birth defects is *primary prevention.*

The WHO project aims to:

- provide support for planning and development of research protocols that will advance understanding of etiology and inform future prevention initiatives;
- facilitate internet-based research databases;
- support gene/environment interaction studies with international standardization of research protocols to inform the design of future efforts towards primary prevention.

These objectives can be achieved by:

- the reinforcement of existing research collaborations, and
- the setting up of new research collaborations.

8.2.4 Future research challenges

With the availability of the human genome sequence, researchers have increasing opportunities to study the role of genes and GEI in human health and disease. Such opportunities come with major challenges, in three main areas:

- **The first area relates to data:** to identify and, if possible, rank the major data gaps separating our current knowledge from that needed for clinical and public health action.
- **The second area relates to methods:** how to conduct, analyse and present studies of multiple genetic and environmental factors in ways that efficiently fill the data gaps.
- **The third area relates to people and institutions:** how to learn more and more quickly using the unique opportunities inherent in international collaboration.

Common core protocols for data collection and further studies into research methodology to compare various data analysis models are urgently required.

8.3 Genetics

The focus of the genetics component of the WHO Craniofacial Conference was on discussing those technologies, analytic approaches and populations that will best move us forward towards a better understanding of the etiologies of craniofacial abnormalities with particular reference to those that have strong genetic components. While recognizing that the environment and stochastic events play an important and, often, major role in predisposing to craniofacial anomalies, in many situations the role of genetics is compelling.

8.3.1 Phenotype/genotype correlation

- A number of specific single-gene disorders with recognizable Mendelian inheritance, including some holoprosencephaly and craniosynostosis syndromes, serve as benchmarks for ways in which gene identification can proceed from clinical description and family-based studies through traditional cloning and functional analysis.

- The definition of non-syndromic cleft lip and palate remains ambiguous, and new gene discoveries leading to improvements in genetic diagnoses will potentially improve sensitivity and specificity of genotype/phenotype correlation.
- There is some emerging evidence that traditional separations between cleft lip, with or without cleft palate, and cleft palate only, may be breaking down, and further work in this area is essential.
- It is therefore important in research to be able to sub-phenotype cases of children whose abnormalities are limited to clefts, or clefts and one additional abnormality. Clinical descriptors that will allow breaking this group down into finer detail will be particularly important in facilitating genetic analysis.

8.3.2 Analytical methodologies

- Technological and analytic approaches will include new methodologies for genotyping, the strategy by which markers will be chosen for genotyping, and the selection of candidate genes when that approach is being utilized.
- The strengths and weaknesses of traditional linkage approaches versus affected pedigree-member approaches and transmission disequilibrium testing (TDT) and linkage disequilibrium were also developed.
- The strengths of these approaches often overlap and combinatorial approaches using candidate genes in conjunction with affected pedigree-member linkage and TDT can all be carried out in parallel with one another.

8.3.3 Collection and storage of genetic data

- Analysis is driven by sample collection, and there are both strengths and weaknesses in:
  (a) rapid, cost-efficient, and small-amount sample collection, as is exemplified by blood spots or cheek swabs; and
  (b) whole blood or cell line collections that would allow for more extensive analysis of protein and RNA.
- International collaboration is essential in that etiologies are likely to be diverse across populations but with some underlying gene and environmental causes shared in common.
- Multi-centre collaborations afford the opportunity for the collection of large numbers of samples to have sufficient power to confirm

linkage or association studies; there are a number of active on-going collaborations.

8.3.4 Parallel research and multidisciplinary approach

- The role of animal models and the insights gained from developmental biology into choosing both genes and pathways involved in CFA genetics have never been more apparent than they are now.
- It will be through the interactive efforts of clinicians, epidemiologists, statisticians, molecular biologists and developmental biologists that we will make our most rapid progress.

8.3.5 Role of the World Health Organization

In the ongoing efforts to globalize CFA research, the WHO group will coordinate work on outlining candidate genes, markers, analytic approaches and animal models of use, and will streamline efforts towards establishing collaborative groups to establish a set of protocols and guidelines for future efforts in this arena.

8.4 Prevention

8.4.1 Primary prevention

Orofacial clefts appear to have substantial environmental causes; the potential for their occurrence thus seems considerable. The pattern of occurrence of orofacial clefts is different from that of neural tube defects so their causes may also be different.

- **Maternal tobacco** use has been consistently associated with a modest elevation in risk of orofacial clefts but the attributable risk may be of public health importance. Moreover tobacco use is rapidly increasing among women, especially in technologically developing countries, and many women are exposed to passive smoking in the home and workplace.
- **Maternal alcohol** use, well known as a cause of the fetal alcohol syndrome, has also been associated with risk of isolated orofacial clefts in some, but not all, studies. The type and context of alcohol consumption differs considerably across populations and more consistent methods are needed for the assessment of maternal alcohol intake. The possible increased risk of orofacial clefts and other CFA related to the common exposures of smoking and alcohol use during pregnancy is a message that should be incorporated into health promotion programmes for women of reproductive age.

- **Maternal nutritional factors** have been associated with the risk for orofacial clefts in human population studies, although strong evidence of a causal relationship is still lacking. The most promising candidate nutrients include folic acid and pyridoxine (vitamin B-6) and some evidence also exists of possible roles for riboflavin (vitamin B-2) and vitamin A.

8.4.2 Intervention trials

The current state of equipoise regarding maternal nutrition and orofacial clefts makes intervention trials of specific nutrients an urgent priority. The proven intervention of folic acid supplements in the prevention of occurrence of NTDs must also be acknowledged in the design of prevention trials involving folic acid. No single trial is likely to be definitive and trials are needed in diverse populations in both industrialized and technologically developing countries. Trials in high-risk populations are more likely to detect a treatment effect than trials in low-risk populations, and at lower cost and with greater speed.

8.4.3 Choice of nutrient

The choice of specific nutrient interventions should be based on prior detailed studies of biochemical indicators of nutritional status in the population of interest, and all prevention trials should adhere to current ethical and methodologic standards. Poorly conceived and conducted trials are unethical because they waste limited resources and add further delay to discovering effective interventions.

8.4.4 Recurrence trial

An orofacial-cleft recurrence-prevention trial is far more feasible than a trial of prevention of primary occurrence, but would still require many thousands of high-risk mothers. Orofacial cleft surveillance systems and registries in countries around the world need to be further developed and linked to provide the critical infrastructure for orofacial-cleft prevention trials.

9 List of participants

Dr Terri Beaty, Johns Hopkins Hospital, 615 N. Wolfe St., Baltimore, MD 21205-2103, USA
E-mail: Tbeaty@phnet.sph.jhu.edu; Tel: +1 410 955 6960; Fax: +1 410 955 0863

Dr Kåre Berg, Director, Institute of Medical Genetics, University of Oslo, Director, Department of Medical Genetics, Ullevål University Hospital, Head, WHO Collaborating Centre for the Community Control of Hereditary Diseases, Oslo, Norway
Tel: +47 22 11 98 85; Fax:+47 22 11 98 99

Dr Lorenzo Botto, Genetic Diseases Branch, Division of Birth Defects & Development Disabilities, Centers for Disease Control and Prevention, 4770 Buford Highway NE, Atlanta, GA 30341, USA
E-mail: lcb9@cdc.gov; Tel: +1 770 488 3235; Fax: +1 770 488 3236

Dr Roberto Brusati, Università degli Studi di Milano, Clinica Odontostomatologica Istituto di Scienze Biomediche S. Paolo, Via A. di Rudini No. 8, 20142 Milano, Italy
E-mail: dogarzi@tin.it; Tel:+39 281 360 77; Fax: +39 281 302 00

Dr Eduardo Castilla, Professor, Eclamc/Genetica/Fiocruz, WHO Collaborating Centre for the Prevention of Congenital Malformations, CP 926, Rio De Janiero RJ 20001-970, Brazil
E-mail: castilla@centroin.com.br; Tel: +55 21 598 43 58; Fax: +55 21 260 42 82;

Dr Arnold Christianson, Dept of Human Genetics, Faculty of Medicine, P O Box 2034, Pretoria 0001, South Africa
E-mail: christal@medic.up.ac.za; christianson@worldonline.co.za (home); reynhardt@med.up.ac.za (secretary); Tel: +27 12 3192626 (work); +27 11 7282965 (home); Fax: +27 12 3232788,

Dr M. Michael Cohen, Dalhousie University, Halifax, Canada NS B3H 3J5
E-mail: remaclea@is.dal.ca; Tel: +1 902 494 6412; Fax: +1 902 494 6411

Dr Christopher Corcoran, Assistant Professor, Department of Mathematics and Statistics, Utah State University, 3900 Old Main Hill, Logan UT 84322-3900, USA
E-mail: corcoran@math.usu.edu; Tel: +1 435 797 4012;Fax: +1 435 797 1822

Dr Timothy C Cox, NH&MRC R Douglas Wright Fellow & Senior Research Fellow, Department of Molecular Biosciences and Centre for the Molecular Genetics of Development, University of Adelaide, Adelaide, South Australia, Australia 5005
President, Aust. and NZ Society for Cell and Developmental Biology Inc.
E-mail: timothy.cox@adelaide.edu.au; Tel: +61 8 8303-4812;
Fax: +61 8 8303-3787 (department); +61 8 8303-7534 (CMGD)

Dr Maxine Croft, TVW Telethon Inst for Child Health Research, Company Limited, The University of Western Australia, PO Box 855, West Perth, WA, 6872, Australia
E-mail: maxine@ichr.uwa.edu.au

Dr Michael Cunningham, Dept of Pediatrics, University of Washington, RR-306 Health Sciences, Box 356320, Seattle, WA 98195-6320, Australia
E-mail: mcunning@u.washington.morphos.rocketmail.com;
Tel: +206 616 5277; Fax: +206 543 3184

Dr Andrew Czeizel, Department of Human Genetics and Teratology, WHO Collaborating Center for the Community Control of Hereditary Diseases, National Centre of Epidemiology, Bolgarkerek U3, Budapest H-1148, Hungary
E-mail: czeizel@interware.hu; Tel: +36 1 394 4712; Fax: +36 1 363 5272

Dr S. Daack-Hirsch, University of Iowa, Division of Neonatology, 229-1W, Iowa City, IA 52242, USA
Tel: +1 319 335 6897; Fax: +1 319 335 6970

Dr Baman M Daver, 22-23 Bakhtavar annexe, Narayan Dabholkar Marg, Mumbai 400 006, India
E-mail: bmdaver@bom8.vsnl.net.in

Dr Virginia Diewert, Professor, Head, University of British Columbia, 2199 Wesbrook Mall, J.B. macDonald Bldg., Rm 372, Vancouver, BC V6T1Z3, Canada
E-mail: vdiewert@unixg.ubc.ca; Tel: +1 604 822 3592; Fax: +1 604 822 3562

Dr Albert DeMey, Centre Hospitalier Universitaire Brugmann, Department of Plastic Surgery, 4 Place Van Gehuchten, 1020 Brussels, Belgium
E-mail: albert.demey@chu-brugmann.be; Tel: +32 2 477 2305; Fax: +32 2 478 0091

Dr Hatem El-Shanti, Department of Pediatrics, Jordan University of Science and Technology, P.O. Box 3211, Irbid 22110, Jordan
E-mail: hatem@just.edu.jo; Tel: +962 2 295 111, ext. 3884; Fax: +962 6 5515598

Dr J. David Erickson, Division of Birth Defects and Developmental Disabilities, US Centres for Disease Control and Prevention, 4770 Bueford Highway NE, Atlanta GA 30341, USA
E-mail: jde1@cdc.gov; Tel: +770 488 7171; Fax: +770 488 7197

Dr Robert P Erickson, Department of Pediatrics, Univ Arizona Health Sciences Center, 1501 B Campbell Avenue, Tucson, AZ 85724-5073, USA
E-mail: erickson@peds.arizona.edu; Tel: +1 520 626 5483; Fax: +1 520 626 7407

Dr Richard H. Finnell, Director, Molecular Genetics, Munroe Meyer Institute, 985455 Nebraska Medical Centre, Omaha, NE 68198-5455, USA
E-mail: rfinnell@unmc.edu; Tel: +1 402 559 5397; Fax: +1 402 559 4001

Dr David FitzPatrick, Senior Clinical Scientist & Honorary Clinical Geneticist, MRC Human Genetics Unit, Western General Hospital, Edinburgh EH4 2XU, Scotland
E-mail: David.FitzPatrick@hgu.mrc.ac.uk; Tel: +44 131 467 8423; Fax: +44 131 343 2620

Dr Evgeny K. Ginter, Research Centre for Medical Genetics, Director, Institute of Clinical Genetics, Head, WHO Collaborating Centre for The Prevention of Hereditary Diseases, 115478 Moscow, Russia
E-mail: ekginter@mtu-net.ru; Tel: +7 095 111 8580; Fax: +7 095 324 0702

Dr Janine Goujard, INSERM, 123 Bd de Port-Royal, U 149, Paris 75014, France
E-mail: goujard@cochin.inserm.fr; Tel: +33 1 4234 55 75; Fax: +33 1 4326 89 79

Dr Widanto Hardjowasito, Physical Anomalies, Mental Retardation & Growth Studies, Faculty of Medicine, Brawijaya University, Jalan Mayor Jenderal Haryono 171, Malang, Indonesia
E-mail: widanto@mlg.mega.net.id; Tel: +62 341 326068; Fax: +62 341 326068

Dr Catherine Hayes, Assistant Professor, Department of Oral Health Policy and Epidemiology, Harvard School of Dental Medicine, 188 Longwood Avenue, Boston MA 02115, USA
E-mail: catherine_hayes@hms.harvard.edu; Tel: +1 617 432 3507; Fax: +1 617 432 0047

Dr Jacqueline Hecht, Division of Medical Genetics, Department of Pediatrics, The University of Texas Medical School, 6431 Fannin, Houston, TX 77225, USA
E-mail: jhecht@ ped1. med. uth.tmc.edu; Tel: 713 500 5764; Fax: 713 796 9984

Dr Pam Houston, Unit of Dental and Oral Health, University of Dundee Dental, Park Place, Dundee DD1 4HR, Scotland
E-mail: m.p.houston@dundee.ac.uk; Tel: +44 1382 425764; Fax: +44 1382 206321

Dr Ethylin W. Jabs, Inst. of Genetic Medicine, Dept of Pediatrics, Johns Hopkins Hospital, 600 N. wolfe St., CMS C 10-04, Baltimore, MD 21287-3914, USA
E-mail: ewjabs@jhmi.edu; Tel: +1 410 955 4160; Fax: +1 410 955 0484

Dr Marilyn C. Jones, Div of Dysmorphology & Genetics, Children's Hospital, 3020 Children's Way #5031, San Diego, CA 92123-2746, USA
E-mail: mjones@chsd.org; Tel: +1 858 576 5840; Fax: +1 858 495 8550

Dr Diana M. Juriloff, Dept of Medical Genetics, University of British Columbia, 6174 University Blvd, Vancouver, BC V67 1Z3, Canada
E-mail: juriloff@interchange.ubc.ca; Tel: +1 604 822 5786; Fax: +1 604 822 5348

Dr Nat Khaole, Research Fellow, Dept. of Pediatrics, Div. Of Dysmorphology/Clinical Genetics and Teratology, University of California, San Diego, 200 West Arbor Drive, San Diego CA 92103-8446, USA
E-mail: nkhaole@ucsd.edu; Tel: +1 619 543 2040; Fax: +1 619 543 3561

Dr David P. Kuehn, University of Illinois at Urbana-Champaign, Department of Sp & Hrg Sci, 901 S Sixth, Champaign, Illinois 61820, USA
E-mail: d-kuehn@uiuc.edu; Tel: +1 217 244 2555; Fax: +1 217 244 2235

Dr Edward J. Lammer, Director, Medical Genetics, Oakland Children's Hospital, 747 52nd St., Oakland, CA 94609-1809, USA
E-mail: cho.dr.ela@cho.org; Tel: +1 510 428 3550; Fax: +1 510 450 5874

Dr S.T. Lee, Senior Consultant Plastic Surgeon & Head, Department of Plastic Surgery, Singapore General Hospital, Outram Road, 169 608, Singapore
E-mail: gzzlst@sgh.gov.sg; Tel: +65 326 6048; Fax: +65 220 9340

Dr Robert Levine, Professor, Departments of Medicine and Pharmacology, Yale University School of Medicine, 47 College Ste. 204, New Haven CT 06520, USA
E-mail: robert.levine@yale.edu; Tel: +1 203 785 4687; Fax: +1 203 785 2847

Dr Huiping Zhu Li, Dept of Health Care Epidemiology, Beijing Medical University, Beijing 100083, People's Republic of China
E-mail: zhuhp@ncmih.bjmu.edu.cn

Dr Andrew Lidral, Asst Professor, Section of Orthodontics, Ohio State University College of Dentistry, Postle Hall, Room 4140, 305 West Twelfth Ave., Columbus, OH 43210, USA
E-mail: lidral.1@osu.edu; Tel: +1 614 292 3526; Fax: +1 614 688 3077

Dr Susi Lieff, Research Assistant Professor, Department of Dental Ecology, School of Dentistry, University of North Carolina, Chapel Hill, North Carolina 27599-7450, USA
E-mail: Susi-_Lieff@dentistry.unc.edu; Tel: +1 919 966 2787; Fax: +1 919 966 6761

Dr Julian Little, Professor, Department of Medicine and Therapeutics, University of Aberdeen, Polwarth Building, Aberdeen AB25 2ZD, Scotland
E-mail: j.little@abdn.ac.uk; Tel: +44 1224 681818 ext. 54485; Fax: +44 1224 849153

Dr Lian Ma, CLP Centre, School of Stomatology, Beijing Medical University, Hai Dian, wei Gong Cun, Beijing 10081, People's Republic of China
E-mail: lmaa@hkucc.hku.hk

Dr Anil Maderee, Professor and Head, Department of Plastic and Reconstructive Surgery, Nelson R Mandela Medical School, University of Natal, Wentworth Hospital, Private Bag Jacobs, Durban 4026, South Africa
E-mail: madaree@wwh.und.ac.za; Tel: +27 31 460 5202; Fax: +27 31 461 3049

Dr Mary Marazita, Cleft Palate-Craniofacial Centre, The University of Pittsburgh, School of Dental Medicine, 317 Salk Hall, 3501 Terrace Ave., Pittsburgh, PA 15261-1931, USA
E-mail: marazita@cpc.pitt.edu; Tel: +1 412 648 8400; Fax: +1 412 648 8404

Dr Phillip May, Principal Investigator, Centre on Alcoholism, Substance Abuse and Addictions, University of New Mexico, 2350 Alamo SE, Albuquerque NM 87106, USA
E-mail: pmay@unm.edu; Tel: +1 505 768 0107; Fax: +1 505 768 0278

Dr Curtis Meinert, Professor and Director, Centre for Clinical Trials, Johns Hopkins University School of Hygiene and Public Health, 615 North Wolfe Street, Baltimore MD 21205, USA
E-mail: bcolliso@jhsph.edu; Tel: +1 410 955 8198; Fax: +1 410 955 0932

Dr Anne Molloy, Biochemistry Department, Trinity College Dublin, Dublin 2, Ireland
E-mail: amolloy@truxa1.tcd.ie; Tel: +353 1 608 1616; Fax: +353 1 677 2400

Dr Danilo Moretti-Ferreira, Servico de Aconselhamento, Genetico da Universidade Estadual Paulista, Caixa Postal 529, 18618-000-Botucatu S.P. Brazil
E-mail: sag@fmb.unesp.br; Tel: +55 14 6821 31 31; Fax: +55 148 21 3744

Dr Osvaldo Mutchinick, Chief, Department of Genetics, Director, WHO Collaborating Centre for Community Genetic Services, National Institute of Nutrition, Vasco de Quiroga 15, Tlalpan, 14000 Mexico, D.F. Mexico
E-mail: osvaldo@servidor.unam.mx; Tel: +52 5 573 1200 x 2425 & 2426; Fax: +52 5 655 6138

Dr Nagato Natsume, 2nd Dept of Oral-Maxillofacial Surgery, School of Dentistry, Aichi-Gakuin University, 2-11 Suemori-Dori, Chikusa-Ku, Nagoya 464, Japan
E-mail: natsume@fs.dpc.aichi-gakuin.ac.jp; Tel: +81 52 752 5990; Fax: +81 52 752 5990

Ms Pauline Nelson, Department of Oral Health and Development, University of Manchester Dental Hospital, Higher Cambridge Street, Manchester M15 6FH, United Kingdom,
E-mail: Pauline.Nelson@man.ac.uk; Tel: +44 161 275 6865; Fax: +44 161 275 6636/6794

Dr Maria Rita Passos-Bueno, Departamento de Biologia, Instituto de Biociencias, Universidade de Sao Paulo, Rua do Matao 277, Sao Paulo, SP 05508-900, Brazil
E-mail: passos@usp.brpassos@ib.usp.br; Tel: +55 11 818 7563; Fax: +55 11 818 7419

Dr Natalie Prescott, Clinical and Molecular Genetics Unit, Institute of Child Health, 30 Guilford Street, London WC1N 1EH, United Kingdom
E-mail: N.Prescott@ich.ucl.ac.uk; Tel: 020 7905 2221

Dr Jorma Rautio, Plastic Surgeon, Cleft Centre, Department of Plastic Surgery, Töölö Hospital Topeliuksenkatu 5, 00260 Helsinki, Finland
E-mail: Jorma.Rautio@hus.fi; Tel: +358 9 4718 7448; Fax: +358 9 4718 7570

Dr J.F. Reinisch, Division of Plastic Surgery, Children's Hospital of Los Angeles, P.O. Box 54700, LA, CA 90054, USA
E-mail: JFR654@aol.com; Tel: +1 213 669 4544; Fax: +1 213 669 4106

Dr Sjurdur Olsen, Danish Epidemiology Science Centre, Statens Serum Institut, 5 Artillerivej, Copenhagen S DK-2300, Denmark
E-mail: sfo@ssi.dk; Tel: +45 32 68 39 55; Fax: +45 32 68 82 42

Dr Antonio Richieri-Costa, Professor, Department of Clinical Genetics, Hospital de Pesquisa e Reabilitacao de Lesoes Labio-Palatais, University of Sao Paolo, Bauru, Brazil
E-mail: richieri@usp.br; Tel: +55 14 235 8183; Fax: +55 14 234 7818

Dr Joy Richman, Dept. of Oral Health Sciences, University of British Columbia, 2199 Wesbrook Mall, Vancouver, B.C. Canada, V6T 1Z3
E-mail: richman@interchange.ubc.ca; Tel: +1 604 822 3568; Fax: +1 604 822 3562

Dr Elisabeth Robert, Institut Europeen des Genomutations, 86 Rue Edmond Locard, F69005 Lyon, France
E-mail: robieg@univ-lynl.fr; Tel: +33 478 25 82 10; Fax: +33 478 36 61 82

Dr Howard Saal, Division of Human Genetics, Children's Hospital Medical Centre, 333 Burnett Ave., Cincinnati, OH 45229-3039, USA
E-mail: SAALHM@CHMCC.ORG; Tel: +1 513 636 4760; Fax: +1 513 559 7297

Dr Gunvor Semb, Senior Lecturer in Craniofacial Anomalies, Orthodontic Unit, Department of Oral Health and Development, University Dental Hospital of Manchester, Higher Cambridge Street, Manchester, M15 6FH, United Kingdom
E-mail: Gunvor.Semb@man.ac.uk; Tel: +44 161 275 6791; Fax:+ 44 161 275 6794

Dr Gary Shaw, Epidemiologist, Research Manager, California Birth Defects Monitoring Program, 1900 Powell Street, Suite 1050, Emeryville, CA 94608-1811, USA
E-mail: gshaw @ a.crl. com; Tel: +1 510 653 3303; Fax:+1 510 653 1678

Dr Richard Smithells, Professor Emeritus, University of Leeds, 5 North Grange Mews, Leeds LS6 2EW, United Kingdom
E-mail: dicknjoy@cwcom.net; Tel: +44 113 275 7280; Fax: +44 113 275 7280

Dr Richard Spritz, Human Medical Genetics Program, University of CO Health Sci Ctr, 4200 E. Ninth Ave. B161, Denver, CO 80262, USA
E-mail: Richard.Spritz@UCHSU.edu; Tel: +1 303 315 7739; Fax: +1 303 315 6932

Dr Claude Stoll, Médecin des Hospitaux, Genetique Medicale Hospital de Hautepierre, Avenue Moliere, 67098 Strasbourg Cedex, France
E-mail: claude.stoll@chru-strasbourgh.fr; Tel: +33 388 12 8120; Fax: +33 388 12 8125

Dr Tsunenobu Tamura, Professor, Department of Nutrition Sciences, University of Alabama at Birmingham, 218 Webb Bldg., 1675 University Blvd., Birmingham, Alabama, 35294, USA
E-mail: Tamurat@uab.edu; Tel: +1 205 934 7478; Fax: +1 205 934 7049

Dr Marie M. Tolarova, Director, Program for Prevention of Cleft Lip and Palate, Department of Orthodontics, School of Dentistry, University of the Pacific, 2155 Webster Street, San Francisco, CA 94115, USA
E-mail: tolarova@sfmail.dental.uop.edu; Tel: +1 415 749 3397; Fax +1 415 929 6549

Dr Inge E.K. Trindade, Hospital de Reabilitacao de Anomalies Craniofacials, Universidade de Sao Paulo, Rua Silvio Marchione 3-20, 17043-900 Bauru, SP, Brazil
E-mail: ingetrin@usp.br; Tel: +55 14 235 8137; Fax: +55 14 234 7818

Dr Ishwar Verma, Head, Department of Medical Genetics, Sir Ganga Ram Hospital, Rajinder Nagar, New Delhi 110 060, India
E-mail: icverma@vsnl.com; Fax: +91 11 685 4434

Dr Denis Viljoen, Professor, Department of Human Genetics, South African Institute of Medical Research, James Murray Building, P.O. Box 1038, Johannesburg 2000, South Africa
E-mail: denisv@mail.saimr.wits.ac.za; Tel: +27 11 489 9239; Fax: +27 11 489 9209 or 9226

Dr Takeshi Wada, Chair. JCPA International Relations Committee, Professor of Oral-Facial Disorders and Therapeutics, Division of Functional Oral Neuroscience, Osaka University Graduate School of Dentistry, 1-8 Yamadaoka, Suita City, Osaka 565-0871, Japan
E-mail: wada@dent.osaka-u.ac.jp; Tel: +81 6 879 2275; Fax: +81 6 879 2279

Dr Martha Werler, Associate Professor, Boston University, Slone Epidemiology Unit, 1371 Beacon St., Brookline, MA 01890, USA
E-mail: mwerler@slone.bu.edu; Tel: +1 617 734 6006; Fax: +1 617 738 5119

Dr Keith West, Professor, Department of International Health, Johns Hopkins University School of Hygiene and Public Health, 615 North Wolfe Street, Baltimore MD 21205, USA
E-mail: kwest@jhsph.edu; Tel: +1 410 955 2061; Fax: +1 410 955 0196

Dr William N. Williams, Department of Oral Biology, University of Florida, College of Dentistry, P.O. Box J424, Gainesville, FL 32610, USA
E-mail: williams@dental.ufl.edu; Tel: +1 904 846 0801; Fax: +1 904 846 1539

Dr Fung Ki Wong, Karolinska Hospital, Dept of Molecular Med, CMM L8:01, SE 171 76, Stockholm, Sweden
E-mail: Fung-Ki.Wong@cmm.ki.se; Tel: +46 8 51773616; Fax: +46 8 51776180

Dr Diego Wyszynski, Genetics Program, L320, Boston University School of Medicine, 715 Albany St., Boston, Boston, MA 02118, USA
E-mail: dfw@bu.edu; Tel: +1 617 638 5393; Fax: +1 617 638 4275

Dr Antonio.Ysunza, Hospital Gea Glez, 4800 Calzada Tlalpan, Mexico DR 14000
E-mail: amysunza@datasys.com.mx

Dr Li Zhu, Professor of Epidemiology and Director, National Centre for Maternal and Infant Health, Peking University Health Science Centre, Room 115, Research Centre Building, 38 College Road, Beijing 100083, People's Republic of China
E-mail: lzh@public.bta.net.cn; Tel: +86 10 6209 1138; Fax: +86 10 6209 1136

Governmental and non-governmental agency representatives

Dr Scott Diehl, OHPRFMEB/DIR/NIDCR/NIH, 45 Center Drive, Natcher Building 45, Room 4AS-43G, Bethesda, MD 20892-6401, USA
E-mail: scott-diehl@nih.gov; Tel: 301/295 1671; Fax: 301/480 8327

Dr Alyssa Easton, Epidemiologist, Office on Smoking and Health, US Centres for Disease Control and Prevention, 4770 Buford Highway NE., Mail Stop K-50, Atlanta GA 30351, USA
E-mail: ace7@cdc.gov; Tel: +1 770 488 5106; Fax: +1 770 488 5848

Ms Delois Greenwood, The Smile Train, 245 Fifth Avenue, Suite 2201, New York, NY 10016, USA
Tel: +1 212 689 9199; Fax: +1 212 689 9299

Ms Beth Marshall, Operation Smile, 6435 Tidewater Drive, Norfolk, VA 23509, USA
Tel: +1 757 321 7645; Fax: +1 757 321 7660

Dr James Mills, Chief, Pediatric Epidemiology Section, National Institute of Child Health and Development, Room 7B03, 9000 Rockville Pike, Bethesda MD 20892-7510, USA
E-mail: jamesmills@nih.gov; Tel: +1 301 496 5394; Fax: +1 301 402 2084

Dr Cynthia Moore, Division of Birth Defects and Developmental Disabilities, US Centers for Disease Control and Prevention, 4770 Buford Highway NE., Atlanta GA 30341, USA
E-mail: cam0@cdc.gov; Tel: +1 770 488 7163; Fax: +1 770 488 7197

Dr Ruth Nowjack-Raymer, Public Health Researcher, Office of Science Policy and Analysis, Office of the Director, National Institute of Dental and Craniofacial Research, Natcher Building, 45 Center Drive, Bethesda MD 20892, USA
E-mail: nowjackr@de45.nidr.nih.gov; Tel: +1 301 594 5394; Fax: +1 301 480 8254

Dr MaryAnn Redford, Director, Clinical Trials Program, National Institute of Dental and Craniofacial Research, Natcher Building, 45 Center Drive, Bethesda MD 20892, USA
E-mail: Maryann.Redford@nih.gov; Tel: +1 301 594 5588

Dr Karen Remlay, Operation Smile, 6435 Tidewater Drive, Norfolk, VA 23509, USA
Tel: +1 757 321 7645; Fax: +1 757 321 7660

Dr Rochelle Small, Program Director, Craniofacial Anomalies and Injuries Branch, National Institute of Dental and Craniofacial Research, Natcher Building, Room 4AN-24K, 45 Center Drive, Bethesda MD 20892, USA
E-mail: rochelle.small@nih.gov; Tel: +1 301 594 9898; Fax: +1 301 480 8318

Mr Baxter Urist, President, The Smile Train, 245 Fifth Avenue, Suite 2201, New York, NY 10016, USA
E-mail: burist@smiletrain.org; Tel: +1 212 689 9199; Fax: +1 212 689 9299

Observers

Dr John Carey, Professor, Division of Medical Genetics, Department of Pediatrics, University of Utah Health Sciences Center, 413 MREB, 50 North Medical Drive, Salt Lake City UT 84132, USA
E-mail: john.carey@hsc.utah.edu

Mr Gene Charoonruk, Research Assistant, Department of Nutrition and Food Sciences, Utah State University, 8700 Old Main Hill, Logan UT 84322-8700, USA
E-mail: gcharoonruk@cc.usu.edu; Tel: +1 435 797 7478; Fax: +1 437 797 2771

Ms Sandra Daak-Hirsch, Division of Neonatology, The University of Iowa College of Medicine, 140 EMRB, Iowa City IA 52242, USA
E-mail: Sandra-Daack-Hirsch@uiowa.edu; Tel: +1 319 335 9967; Fax: +1 319 335 6848

Ms Marcia Feldkamp, Director, Utah Birth Defect Network, Utah Department of Health, 44 North Medical Drive, P.O. Box 144697, Salt Lake City UT 84114-4697, USA
E-mail: mfeldkam@doh.state.ut.us; Tel: +1 801 584 8443; Fax: +1 801 584 8488

Dr Robert Gillies, Assistant Professor, Department of Geography and Earth Resources, Utah State University, 4820 Old Main Hill, Logan UT 84322-4820, USA
E-mail: rgillies@nr.usu.edu; Tel: +1 435 797 2664; Fax: +1 435 797 2117

Dr Jianjun Zhang, Post-doctoral Research Associate, Department of Nutrition and Food Sciences, Utah State University, 8700 Old Main Hill, Logan UT 84322-8700, USA
E-mail: jjzhang@cc.usu.edu; Tel: +1 435 797 2305; Fax: +1 435 797 2771

WHO Secretariat and Planning Committee

Ms Christina Adam, Assistant, Human Genetics Programme, Department of the Management of Noncommunicable Diseases, WHO, CH-1211 Geneva 27, Switzerland
E-mail: adamc@who.ch; Tel: +41 22 791 3756; Fax: +41 22 791 47 69

Dr David Barmes, Special Expert for International Health, Office of International Health, National Institute of Dental and Craniofacial Health, Natcher Buiding, 45 Center Drive, Bethesda, Maryland 20892, USA
E-mail: barmesd@iprolink.ch; Tel: +41 22 362 3973; Fax: +41 22 791 4866

Dr Victor Boulyjenkov *(Secretary),* Scientist, Human Genetics Programme, Department of the Management of Noncommunicable Diseases, WHO, CH-1211 Geneva 27, Switzerland
E-mail: boulyjenkovv@who.ch; Tel: +41 22 791 3442; Fax: +41 22 791 47 69

Dr Kevin Hardwick, Office of International Health, National Insititute of Dental and Craniofacial Research, Natcher Building, 45 Center Drive, Bethesda MD 20892, USA
E-mail: Kevin.Hardwick@nih.gov; Tel: +1 301 594 2765; Fax: +1 301 402 7033

Dr Miriam Hirschfeld, Special Adviser, Home and Long-term care, WHO,
CH-1211 Geneva 27, Switzerland
E-mail: Hirschfeldm@who.ch; Tel: +41 791 2507

Dr Peter Mossey *(Co-Chairperson and Co-Rapporteur)*, Senior Lecturer/Consultant in Orthodontics, Dundee Dental School, Park Place, Dundee DD1 4HR, Scotland
E-mail: p.a.mossey@dundee.ac.uk; Tel: +44 1382 425761; Fax: +44 1382 206321

Ms. Elizabeth Mottier-D'Souza, Assistant, Human Genetics Programme, Department of the Management of Noncommunicable Diseases, WHO, CH-1211 Geneva 27, Switzerland
E-mail: mottierdsouzae@who.ch; Tel: +41 22 791 3276; Fax: +41 22 791 4769

Dr Ronald Munger *(Co-Chairperson and Co-Rapporteur)*, Professor, Department of Nutrition and Food Sciences, Utah State University, 4450 Old Main Hill, Logan UT 84322-4450, USA
E-mail: rmunger@cc.usu.edu; Tel: +1 435 797 2122; Fax: +1 435 797 2771

Dr Jeffrey Murray *(Co-Chairperson and Co-Rapporteur)*, Professor, Department of Pediatrics, The University of Iowa College of Medicine, W229 General Hospital, Iowa City IA 52242, USA
E-mail: jeff-murray@uiowa.edu; Tel: +1 319 335 6897; Fax: +1 319 335 6970

Dr Nancy Sassano, Project Manager, Department of Nutrition and Food Sciences,
Utah State University, 4450 Old Main Hill, Logan UT 84322-4450, USA
E-mail: nsassano@cc.usu.edu; Tel: +1 435 797 0904; Fax: +1 435 797 2771

Dr William Shaw *(Co-Chairperson and Co-Rapporteur),* Professor,
Department of Oral Health and Development, University Dental Hospital of Manchester,
Higher Cambridge Street, Manchester M15 6FH, United Kingdom
E-mail: Bill.Shaw@man.ac.uk; Tel: +44 161 275 6865; Fax: +44 161 275 6636

Mr. Gary Neuenswander, Media Specialist, Agricultural Experiment Station,
Utah State University, 4845 Old Main Hill, Logan UT 84322-4845, USA
E-mail: gary@agx.usu.edu; Tel: +1 435 797 2187; Fax: +1 435 797 3321

10 References

Aaby P, Babiker A (1997) Ethics of HIV trials [letter; comment] [see comments]. *Lancet,* 350(9090): 1546.

Abbott BD, Birnbaum LS (1990) Retinoic acid-induced alterations in the expression of growth factors in embryonic mouse palatal shelves. *Teratology,* 42(6): 597-610.

Abbott BD, Pratt RM (1988) EGF receptor expression in the developing tooth is altered by exogenous retinoic acid and EGF. *Develepmental Biology*, 128(2): 300-4.

Abrishamchian AR, Khoury, MJ, Calle EE (1994) The contribution of maternal epilepsy and its treatment to the etiology of orofacial clefts: a population based case-control study. *Genetic Epidemiology,* 11: 343-51.

Aghi M, Asma S, Yeong C, Vaithinathan R (2002) Initiation and maintenance of tobacco use. In: Samet J, S Yoon, eds. *Women and the Tobacco Epidemic: Challenges for the 21st Century.* Geneva, World Health Organization: 49.

Ahuja S, Datta A, Krishna A, Bhattacharya A (1994) Infra-orbital nerve block for relief of postoperative pain following cleft lip surgery in infants. *Anaesthesia*, 49: 441-444.

Almasy L, Blangero J (1998) Multi-point quantitative-trait linkage analysis in general pedigrees. *American Journal of Human Genetics*, May, 62(5): 1198-211.

Amland PF, Andenaes K, Samdal F, Lingaas E, Sandsmark M, Abyholm F, Giercksky E (1995) A prospective, double-blind, placebo-controlled trial of a single dose of azithromycinon postoperative wound infections in plastic surgery. *Plastic Reconstructive Surgery,* 96: 1378-1383.

Andrews, J, McGarry, JM (1972) A community study of smoking in pregnancy. *Journal of Obstetrics and Gynaecology* (British Commonwealth), 79: 1057-73.

Ardinger HH, Buetow KH, Bell GI, Bardach J, VanDemark DR, Murray JC (1989) Association of genetic variation of the transforming growth factor-alpha gene with cleft lip and palate. *American Journal of Human Genetics,* Sep, 45(3): 348-53.

Asher-McDade C, Brattström V, Dahl E, McWilliam J, Mølsted K, Plint DA, Prahl-Andersen B, Semb G, Shaw WC (1992) The RPS: A six-centre international study of treatment outcome in patients with clefts of the lip and palate: Part 4. Assessment of nasolabial appearance. *Cleft Palate-Craniofacial Journal,* 29: 409-412.

Atack NE, Hathorn IS, Semb G, Dowell T, Sandy JR (1997) A new index for assessing surgical outcome in unilateral cleft lip and palate subjects aged five: reproducibility and validity. *Cleft Palate-Craniofacial Journal,* 34: 242-246.

Bamji MS, Sarma KV, Radhaiah G (1979) Relationship between biochemical and clinical indices of B-vitamin deficiency. A study in rural school boys. *British Journal of Nutrition,* 41(3): 431-41.

Baum M (1981) Scientific empiricisms and clinical medicine: a discussion paper. *Journal of the Royal Society of Medicine,* 74: 504-509.

Bearn DR, Mildinhall S, Murphy T, Murray JJ, Sell, Shaw WC, Williams AC, Sandy JR (2001) Cleft Lip and Palate Care in the United Kingdom – The Clinical Standards Advisory Group (CSAG) Study. Part 4: Outcome Comparisons, Training, and Conclusions. *Cleft Palate-Craniofacial Journal,* 38(1): 38-43.

Beaty TH, Hetmanski JB, Zeiger JS, Fan YT, Liang KY, VanderKolk CA, McIntosh I (2002) Testing candidate genes for non-syndromic oral clefts using a case-parent trio design. *Genetic Epidemiology,* Jan 22(1): 1-11.

Bergland O, Semb G, Åbyholm FE (1986) Elimination of the residual alveolar cleft by secondary bone grafting and subsequent orthodontic treatment. *Cleft Palate Journal,* 23: 175-205.

Berkowitz S (1995) Ethical issues in the case of surgical repair of cleft palate. *Cleft Palate-Craniofacial Journal,* 32: 271-276.

Bixler D (1981) Genetics and clefting. *Cleft Palate Journal,* 18: 10-18.

Blake KD, Davenport SL, Hall BD, Hefner MA, Pagon RA, Williams MS, Lin AE, Graham JM Jr. (1998) CHARGE association: an update and review for the primary pediatrician. *Clinical Pediatrician,* 37(3): 159-173.

Bonner J, Slavkin H (1975) Cleft palate susceptibility linked to histocompatibility-2 (H-2) in the mouse. *Immunogenetics* 2: 213-218.

Botto LD, Khoury, MJ, Mulinare, J, Erickson JD (1996) Periconceptional multivitamin use and the occurrence of conotruncal heart defects: results from a population-based, case-control study. *Pediatrics*, 98: 911-7.

Boyne PJ, Sands NR (1972) Secondary bone grafting of residual alveolar and palatal clefts. *Journal of Oral Surgery,* 30: 87-92.

Boyne PJ, Sands NR (1976) Combined orthodontic surgical management of residual alveolar clefts defects. *Journal of Oral Surgery,* 70: 20-37.

Braybrook C, Doudney K, Marcano AC, Arnason A, Bjornsson A, Patton MA, Goodfellow PJ, Moore GE, Stanier P (2001) The T-box transcription factor gene TBX22 is mutated in X-linked cleft palate and ankyloglossiurea. *Nature Genetics,* Oct, 29 (2): 179-83.

Bremerich DH, Neidhart G, Heinmann K, Kessler P, Behne M. (2001) Prophylactically-administered rectal acetaminophen does not reduce postoperative opioid requirements in infants and small children undergoing elective cleft palate repair. *Anesthesia and Analgesia,* 92: 907-912.

Briggs RM (1976) Vitamin supplementation as a possible factor in the incidence of cleft lip/palate deformities in humans. *Clinics in Plastic Surgery,* 3(4): 647-52.

Brine EA, Rickard KA, Brady MS, Liechty EA, Manatunga A, Sadove M, Bull M J (1994) Effectiveness of two feeding methods in improving energy intake and growth of infants with cleft palate: a randomized study. *Journal of the American Dietetic Association,* 94: 732-738.

Broman KW, Murray JC, Sheffield VC, White RL, Weber JL (1998) Comprehensive human genetic maps: individual and sex-specific variation in recombination. *American Journal of Human Genetics,* Sep 63(3): 861-9.

Brown JE, Kahn ES (1997) Maternal nutrition and the outcome of pregnancy. A renaissance in research. *Clinics in Perinatology,* 24: 433-49.

Carinci F, Pezzetti F, Scapoli L, Martinelli M, Carinci P, Tognon M (2000) Genetics of nonsyndromic cleft lip and palate: a review of international studies and data regarding the Italian population. *Cleft Palate-Craniofacial Journal,* Jan 37(1): 33-40.

Carstairs V, Morris R (1990) Deprivation and health in Scotland. *Health Bulletin* (Edinburgh), 48(4): 162-175.

Chalmers I (1997) What is the prior probability of a proposed new treatment being superior to established treatments? *British Medical Journal,* 314: 74-75.

Chalmers I, Altman DC (1995) *Systematic Reviews*. London, British Medical Journal Publishing Group.

Chalmers I, Lindley R (2000) Double standards on informed consent to treatment. In: "*Informed consent in medical research: respecting patients*" *rights in research, teaching and practice.* London, British Medical Journal Publications; Part 4, Chapter 26.

Chalmers T (1978) The ethics of randomization as a decision-making technique and the problem of informed consent. In: Beauchamp T, L Walters, eds. *Contemporary Issues in Bioethics.* Encino, California, Dickenson: 426-429.

Chalmers TC (1979) Invited Remarks. *Clinical Pharmacology and Therapeutics,* 25: 649-650.

Chen PK, Yeow VK, Noordhoff MS, Chen YR (1999) Augmentation of the nasal floor with Surgical in primary lip repair: a prospective study showing no efficacy. *Annals of Plastic Surgery,* 2: 149-53.

Ching, GHS, Chung CS (1974) A genetic study of cleft lip and palate in Hawaii. 1. Interracial crosses. *American Journal of Human Genetics,* 26: 162-172.

Chowdri NA, Darzi MA, Ashraf MM. (1990) A comparative study of surgical results with rotation-advancement and triangular flap techniques in unilateral cleft lip. *British Journal of Plastic Surgery,* 43: 551-6.

Christensen K, Fogh-Anderson P (1994) Etiological subgroups in non-syndromic isolated cleft palate. A genetic epidemiological study of 52 Danish birth cohorts. *Clinical Genetics,* 46: 329-335.

Christianson A (2001) Orofacial clefting in sub Saharan Africa. Working paper presented to WHO Meeting "International Collaborative Research on Craniofacial Anomalies", Geneva, 5-8 November.

Clinical Standards Advisory Group: Cleft Lip and/or Palate (1998) Department of Health. Her Majesty's Stationery Office. ISBN 0 11 322103 7.

The Cochrane Collaboration. (http:// www.cochrane.org)

Cohen MM Jr (1995) Craniosynostoses: phenotypic/molecular correlations. *American Journal of Medical Genetics,* Apr 10; 56(3): 334-9.

Cohen MM Jr, Kreiborg S, Lammer EJ, Cordero JF, Mastroiacovo P, Erickson JD, Roeper P, Martinez-Frias ML (1992) Birth prevalence study of the Apert syndrome. *American Journal of Medical Genetics,* 42(5): 655-659.

Cohen MM Jr, Kreiborg S (1992) Birth prevalence studies of the Crouzon syndrome: comparison of direct and indirect methods. *Clinical Genetics,* 41(1): 12-15.

Colmenares C, Heilstedt HA, Shaffer LG, Schwartz S, Berk M, Murray JC, Stavnezer E (2002) Loss of the SKI proto-oncogene in individuals affected with 1p36 deletion syndrome is predicted by strain-dependent defects in Ski-/-mice. *Nature Genetics,* Jan 30(1): 106-9.

Conway H (1958) Effect of supplemental vitamin therapy on the limitation of incidence of cleft lip and cleft palate in humans. *Plastic and Reconstrive Surgery,* 22(5): 450-453.

Conway H, Wagner KJ (1966) Incidence of clefts in New York City. *Cleft Palate Journal,* 3: 284-290.

Cordier S, Ha MC, Ayme S, Goujard J (1992) Maternal occupational exposure and congenital malformations. *Scandinavian Journal of Work, Environment and Health,* 18: 11-17.

Cordier S, Lefeuvre B, Filippini G, Peris-Bonet R, Farinotti M, Lovicu G, Mandereau L (1997) Parental occupation, occupational exposure to solvents and polycyclic aromatic hydrocarbons and risk of childhood brain tumors (Italy, France, Spain). *Cancer Causes Control,* 8: 688-697.

Cornel MC, Spreen JA, Meijer I, Spauwen PH, Dhar BK, ten Kate LP (1992) Some epidemiological data on oral clefts in the northern Netherlands 1981-1988. *Journal of Cranio-Maxillo-Facial Surgery,* 20: 147-52.

Cornelissen AM, Maltha JC, Von den Hoff HW, Kuijpers-Jagtman AM (1999a) Palatal mucoperiosteal wound healing in the rat. *European Journal of Oral Sciences,* 107;5: 344-351.

Cornelissen AM, Von den Hoff JW, Maltha JC, Kuijpers-Jagtman AM (1999b) Effects of interferons on proliferation and collagen synthesis of rat palatal wound fibroblasts. *Archives of Oral Biology,* 44(7): 541-547.

Cornelissen AM, Maltha JC, Von den Hoff JW, Kuijpers-Jagtman AM (2000a) Local injection of IFN-gamma reduces the number of myofibroblasts and the collagen content in palatal wounds. *Journal of Dental Research,* 79(10): 1782-1788.

Cornelissen AM, Stoop R, Von Den Hoff HW, Maltha JC, Kuijpers-Jagtman AM (2000b) Myofibroblasts and matrix components in healing palatal wound in the rat. *Journal of Oral Pathological Medicine,* 29(1): 1-7.

Council for International Organizations of Medical Sciences (2001) International ethical guidelines for biomedical research involving human subjects (draft revision 2001; http: // www.cioms.ch). Geneva, Council for International Organizations of Medical Sciences.

Croen LA, Shaw GM, Lammer EJ (1996) Holoprosencephaly: epidemiologic and clinical characteristics of a California population. *American Journal of Medical Genetics,* 64(3): 465-472.

Croen LA, Shaw GM, Wasserman CR, Tolarova MM (1998) Racial and ethnic variations in the prevalence of orofacial clefts in California, 1983-1992. *American Journal of Human Genetics*, 79(1): 42-7.

Czeizel A, Revesz C (1970) Major malformations of the central nervous system in Hungary. *British Journal Preventive and Social Medicine,* 24(4): 205-222.

Czeizel A, Tusnadi G (1971) An epidemiologic study of cleft lip with or without cleft palate and posterior cleft palate in Hungary. *Human Heredity,* 21(1): 17-38.

Czeizel A, Tusnady G (1984) Isolated common congenital abnormalities in Hungary: Akademiai Kiado, Budapest.

Czeizel AE (1993a) Controlled studies of multivitamin supplementation on pregnancy outcomes. *Annals of the New York Academy of Sciences,* 678: 266-75.

Czeizel AE (1993b) Prevention of congenital abnormalities by peri-conceptional multivitamin supplementation. *British Medical Journal,* 306(6893): 1645-8.

Czeizel AE (1996) Reduction of urinary tract and cardiovascular defects by periconceptional multivitamin supplementation. *American Journal of Medical Genetics,* 62: 179-83.

Czeizel AE (1998) Peri-conceptional folic acid containing multivitamin supplementation. *European Journal of Obstetrics, Gynecology and Reproductive Biology,* 78(2): 151-61.

Czeizel AE, Dudas I (1992) Prevention of the first occurrence of neural-tube defects by peri-conceptional vitamin supplementation [see comments]. *New England Journal of Medicine,* 327(26): 1832-5.

Czeizel AE, Dudas I, Metneki J (1994) Pregnancy outcomes in a randomized controlled trial of peri-conceptional multivitamin supplementation. Final report. *Archives of Gynecology and Obstetrics,* 255(3): 131-9.

Czeizel AE, Hirschberg J (1997) Orofacial clefts in Hungary. Epidemiological and genetic data, primary prevention. *Folia Phoniatrica et Logopedica,* 49(3-4): 111-6.

Czeizel AE, Timar L, Sarkozi A (1999) Dose-dependent effect of folic acid on the prevention of orofacial clefts. *Pediatrics,* 104(6): 66.

Daly LE, Kirke PN, Molloy A, Weir, DG, Scott JM (1995) Folate levels and neural tube defects. Implications for prevention [see comments]. *Jama*, 274, 1698-702.

Darzi MA, Chowdri NA, Bhat AN (1996) Breast feeding or spoon feeding after cleft lip repair: a prospective, randomized study. *British Journal of Plastic Surgery,* 49: 24-26.

Davis SD, Nelson T, Shepard TH. (1970). Teratogenicity of vitamin B6 deficiency: omphalocele, skeletal and neural defects, and splenic hypoplasia. *Science,* 169 (952): 1329-30.

Derijcke A, Eerens A, Carels C (1996) The incidence of oral clefts: a review. *British Journal of Oral and Maxillofacial Surgery,* 34(6): 488-494.

Diehl SR, Erickson RP (1997) Genome scan for teratogen-induced clefting susceptibility loci in the mouse: evidence of both allelic and locus heterogeneity distinguishing cleft lip and cleft palate. *Proceedings of the National Academy of Science, USA*. May 13; 94(10): 5231-6.

Dickersin K, Min YI, Meinert CL (1992) Factors influencing publication of research results: follow-up of publications submitted to two institutional review boards. *Jama*, 263: 374-378.

Dickersin K, Min YI (1993) NIH clinical trials and publication bias. *Online Journal of Current Clinical Trials,* Apr 28: Doc No. 50.

Dostal M, Schubert J (1990) Further studies on protective effects of vitamins in cyclophosphamide-induced cleft palate. *International Journal of and Maxillofacial Surgery,* 19(5): 308-11.

Douglas B (1958) The role of environmental factors in the etiology of "so-called" congenital malformations. I. Deductions from the presence of cleft lip and palate in one of identical twins, from embryology and from animal experiments. *Plastic and Reconstructive Surgery,* 22(2): 94-108.

Dravet C, Julian C, Legras C, Magaudda, A, Guerrini R, Genton P, Soulayrol S, Giraud N, Mesdjian E, Trentin G, et al. (1992) Epilepsy, antiepileptic drugs, and malformations in children of women with epilepsy: a French prospective cohort study. *Neurology*, 42: 75-82.

Drillien CM, Ingram TTS, Wilkinson EM (1966) *The causes and natural history of cleft lip and palate.* Livingston, Edinburgh.

Easterbrook PJ, Berlin JA, Gopalan R, Matthews DW (1991) Publication bias in clinical research. *Lancet,* 337: 867-872.

ECLAMC (1999) The Latin American Collaborative Study of Congenital Malformations: *Registry Report 1999.*

Egger M, Zellweger-Zahner T, Schneider M, Junker C, Lengeler C, Antes G (1997) Language bias in randomized controlled trials published in English and German. *Lancet*, 350: 326-329.

Elwood JM, Colquhoun TA (1997) Observations on the prevention of cleft palate in dogs by folic acid and potential relevance to humans. *New Zealand Veterinary Journal,* 45: 254-256.

Emanuel I, Culver BH, Erickson JD, Guthrie, B, Schuldberg, D (1973) The further epidemiological differentiation of cleft lip and palate: a population study of clefts in King County, Washington, 1956-1965. *Teratology*, 7(3): 271-81.

Enemark H, Friede H, Paulin G, Semb G, Åbyholm F, Bolund S, Lija J, Östrup L (1991) Lip and nose morphology in patients with unilateral cleft lip and palate patients from four Scandinavian centres. *Scandinavian Journal of Plastic and Reconstructive Surgery and Hand Surgery,* 27: 41-47.

Erickson JD (1984) Assessing occupational hazards to reproduction: uses of existing data sets. *Progress in Clinical and Biological Research,* 160: 99-107.

Erickson JD (1991) Risk factors for birth defects: data from the Atlanta Birth Defects Case-Control Study. *Teratology*, 43: 41-51.

Ericson A, Kallen B, Westerholm P (1979) Cigarette smoking as an etiologic factor in cleft lip and palate. *American Journal of Obstetrics and Gynecology,* 135: 348-51.

Evans, DR, Newcombe RG, Campbell H (1979) Maternal smoking habits and congenital malformations: a population study. *British Medical Journal,* 2: 171-3.

Fogh-Andersen P (1961) Incidence of cleft lip and palate: constant or increasing? *Acta Chirurgica Scandinavica,* 122, 106-111.

Flynn A, Miller SI, Martier SS, Golden NL, Sokol RJ, Del Villano BC (1981) Zinc status of pregnant alcoholic women: a determinant of fetal outcome. *Lancet,* 1: 572-51.

Ferguson MWJ, Whitby DJ, Shah M, Armstrong J, Siebert JW, Longaker MT (1996) Scar Formation: The spectral nature of fetal and adult wound repair. *Plastic and Reconstructive Surgery,* 97: 854-860.

Finnell RH, Greer KA, Barber RC, Piedrahita JA (1998) Neural tube and craniofacial defects with special emphasis on folate pathway genes. *Critical Reviews in Oral Biology and Medicine,* 9: 38-53.

Fogh-Andersen P (1942) Inheritance of harelip and cleft palate: contribution to the elucidation of the etiology of the congenital clefts of the face, Busck, Copenhagen.

Fraser FC (1968) Cleft lip and cleft palate. *Cleft Palate Journal,* Jul 5, 187-94.

Fraser FC (1970) The genetics of cleft lip and cleft palate. *American Journal of Human Genetics*, 22: 336-352.

Fraser FC, Fainstat TD (1951) Production of congenital defects in the offspring of pregnant mice treated with cortisone. *Pediatrics*, 8: 527-533.

Freedman B (1987) Equipoise and the ethics of clinical research. *New England Journal of Medicine,* 317(3): 141-145.

Friede H, Enemark H, Semb G, Paulin G, Åbyholm F, Bolund S, Lija J, Östrup L (1991) Craniofacial and occulusal characteristics in unilateral cleft lip and palate patients from four Scandinavian centres. *Scandinavian Journal of Plastic and Reconstructive Surgery and Hand Surgery,* 25: 269-276.

Friede H (1998) Growth sites and growth mechanisms at risk in cleft lip and palate. *Acta Odontologica Scandinavica,* 56: 346-351.

Gabbka J (1981) Verhutung von lippen-kiefer-gaumenspalten: klinisch erfahrungen (German). *München Medizinische Wochenschrift,* 123(28): 1139-41.

Gehan AE (1984) The evaluation of therapies: historical control studies. *Statistics in Medicine,* 3: 315-324.

Giroud A, Boisselot J (1947) *Archives Françaises de Pédiatrie,* 4: 317.

Giroud A, Boisselot J (1951) Influence teratogène de la carence en acide folique (French). *Compt Rend Soc Biol,* 145(526).

Golding J (1986) Is vomiting during pregnancy teratogenic? [letter]. *British Medical Journal* (Clin Res Ed), 292: 1136.

Gordon JES, CM (1981) Agricultural use and congenital cleft lip and/or palate. *Archives of Environmental Health,* 36: 213-221.

Grunwell P, Brøndsted K, Henningsson G, Jansonius K, Karling J, Meijer M, Ording U, Wyatt R, Vermeij-Zieverink E, Sell D (2000) A six-centre international study of treatment outcome of treatment in patients with clefts of the lip and palate: The results of a cross-linguistic investigation of cleft palate speech. *Scandinavian Journal of Plastic and Reconstructive Surgery and Hand Surgery,* 34: 219-229.

Hagberg C, Larson O, Milerad J (1997) Incidence of Cleft Lip and Palate and Risks of Additional Malformations. *Cleft Palate-Craniofacial Journal,* 35, 40-45.

Hale F (1933) Pigs born without eyeballs. *Journal of Heredity,* 24: 105-6.

Hale F (1935) The relation of vitamin A to anopthalmos in pigs. *American Journal of Opthalmology*, 18(12): 1087-92.

Hay S. (1971) Incidence of selected congenital malformation in Iowa. *American Journal of Epidemiology,* 94, 572-584.

Hayes C, Werler MM, Willett WC, Mitchell AA (1996) Case-control study of periconceptional folic acid supplementation and orofacial clefts. *American Journal of Epidemiology,* 143: 1229-1234.

Hemminki K, Mutanen P, Saloniemi I, Luoma K (1981) Congenital malformations and maternal occupation in Finland: multi-variate analysis. *Journal of Epidemiology and Community Health,* 35: 5-10.

Hernandez-Diaz S, Werler MM, Walker AM, Mitchell AA (2000) Folic acid antagonists during pregnancy and the risk of birth defects. *New England Journal of Medicine,* 343(22): 1608-14.

Holmberg PC, Hernberg S, Kurppa K, Rantala K, Riala R (1982) Orofacial clefts and organic solvent exposure during pregnancy. I*nternational Archives of Occupational and Environmental Health,* 50: 371-376.

Holtmann B, Wray RC, Weeks PM (1984) A comparison of three techniques of palatorrhaphy: early speech results. *Annals of Plastic Surgery,* 12: 514-518.

Hook EB (1976) In: Kelly, S, Hook, EB, Janerich, DT, Porter, ID eds. *Birth Defects: Risks and Consequences*. New York, Academic Press, 173-183.

Hwang SJ, Beaty TH, Panny SR, Street NA, Joseph JM, Gordon S, McIntosh I, Francomano CA (1995) Association study of transforming growth factor alpha (TGFα) TaqI polymorphism and orofacial clefts: Indication of gene/environment interaction in a population-based sample of infants with birth defects. *American Journal of Epidemiology,* 141: 629-636.

IARC Working Group (2000) IARC Monographs on the Evaluation of Carcinogenic Risks to Humans. Volume 76. Some antiviral and antineoplastic drugs, and other pharmaceutical agents. Lyon, International Agency for Research on Cancer.

Iizuka T (1973) High incidence of cleft lip and cleft palate in the human embryos and early foetuses. *Okajimas Folia Anatomica Japonica (Tokyo),* 259.

Ingalls TH, Taube IE, Kilingberg MA (1964) Cleft lip and cleft palate: epidemiological considerations. *Plastic and Reconstructive Surgery,* 4: 1-10.

Jacobsson C, Granstrom G (1997) Effects of vitamin B6 on beta-aminoproprionitrile-induced palatal cleft formation in the rat. *Cleft Palate-Craniofacial Journal,* 34(2): 95-100.

Jigjinni V, Kangesku T and Sommerlad BC (1993) Do babies require arm splints after cleft palate repair. *British Journal of Plastic Surgery,* 46: 680-685.

Johnson VP, Swayze VW, II, Sato Y, Andreasen NC (1996) Fetal alcohol syndrome: craniofacial and central nervous system manifestations. *American Journal of Medical Genetics,* 61(4): 329-39.

Johnston MC, Bronsky DA (1995) Prenatal craniofacial development: new insights on normal and abnormal mechanisms. *Critical Reviews in Oral Biology and Medicine,* 6: 368-422.

Jolleys A, Robertson NRE (1972) A study of the effects of early bone grafting in complete clefts of the lip and palate – five year study. *British Journal of Plastic Surgery,* 25: 229-237.

Jones MC (1988) Etiology of facial clefts: prospective evaluation of 428 patients. *Cleft Palate Journal,* Jan 25(1): 16-20.

Juriloff DM, Harris MJ, Brown CJ (2001) Unravelling the complex genetics of cleft lip in the mouse model. *Mammalian Genome,* Jun 12(6): 426-35.

Kallen B, Harris J, Robert E (1996) The epidemiology of orofacial clefts. 2. Associated malformations. *Journal of Craniofacial Genetics and Developmental Biology,* 16, 242-248.

Kallen K (1997) Maternal smoking and orofacial clefts. *Cleft Palate-Craniofacial Journal,* 34: 11-6.

Kalter H (1957) Factors influencing the frequency of cortisone-induced cleft palate in mice. *Journal of Experimental Zoology*, 134: 449-467.

Kalter H, Warkany J (1957) Congenital malformations in inbred strains of mice induced by riboflavin-deficient, galactoflavin-containing diets. *Journal of Experimental Zoology,* 136: 531-536.

Kaufman N, Nichter M (2002) The Marketing of Tobacco to Women: Global Perspectives. In: Samet J, Yoon S, eds. *Women and the Tobacco Epidemic: Challenges for the 21st Century.* Geneva, World Health Organization: 69-98.

Kelsey JL, Dwyer T, Holford TR, Bracken MB (1978) Maternal smoking and congenital malformations: an epidemiological study. *Journal of Epidemiology and Community Health,* 32: 102-107.

Khoury MJ, Weinstein A, Panny S, Holtzman NA, Lindsay PK, Farrel K, Eisenberg M (1987) Maternal cigarette smoking and orofacial clefts: a population-based study. *American Journal of Public Health,* 77: 623-625.

Khoury MJ, Gomez-Farias M, Mulinare J (1989) Does maternal cigarette smoking during pregnancy cause cleft lip and palate in offspring? *American Journal of Diseases of Children,* 143: 333-7.

Khoury MJ, James LM, Flanders WD, Erickson JD (1992) Interpretation of recurring weak associations obtained from epidemiologic studies of suspected human teratogens. *Teratology*, 46: 69-77.

Kirke PN, Molloy AM, Daly LE, Burke H, Weir DG, Scott JM (1993) Maternal plasma folate and vitamin B12 are independent risk factors for neural tube defects. *Quarterly Journal of Medicine,* 86: 703-8.

Klebanoff MA, Koslowe PA, Kaslow R, Rhoads GG (1985) Epidemiology of vomiting in early pregnancy. *Obstetrics and Gynecology,* 66: 612-616.

Kochhar DM, Penner JD, Tellone CI (1984) Comparative teratogenic activities of two retinoids: effects on palate and limb development. *Teratogenesis, Carcinogenesis, and Mutagenesis,* 4(4): 377-87.

Konst EM, Weersink-Braks H, Rietveld T, Peters H (2000) An intelligibility assessment of toddlers with cleft lip and palate who received and did not receive presurgical infant orthopedic treatment. *Journal of Communication Disorders,* 33: 483-499.

Kotch LE, Sulik KK (1992) Experimental fetal alcohol syndrome: proposed pathogenic basis for a variety of associated facial and brain anomalies. *American Journal of Medical Genetics,* 44(2): 168-76.

Krause BS, Kitamure H, Ooe T (1963) Malformations with cleft lip and palate in human embryos and foetuses. *American Journal of Obstetrics and Gynaecology,* 321.

Kullander S, Kallen B (1976) A prospective study of drugs and pregnancy. II. Anti-emetic drugs. *Acta Obstetricia et Gynecologica Scandinavica,* L: 55, 105-11.

Kremenak CR (1984). Physiological aspects of wound healing: contraction and growth. *Otolaryngologic Clinics of North America,* 17: 437-453.

Kuehn DP, Moller KT (2000) Speech and language issues in the cleft palate population: The state-of-the-art. *Cleft Palate-Craniofacial Journal,* 37 (348): 1-35.

Kuehn DP, Imrey PB, Tomes L, Jones DL, O'Gara MM, Seaver EJ, Smith BE, VanDemark DR, Wachtel JM (In press). Efficacy of continuous positive airway pressure (CPAP) therapy for the treatment of hypernasality. *Cleft Palate-Craniofacial Journal.*

Kuijpers-Jagtman AM, Prahl C (1996) A study into the effects of presurgical orthodpedic treatment in complete unilateral cleft lip and palate patients. A three-centre prospective clinical trial in Nijmegen, Amsterdam and Rotterdam. Interim analysis. Nijmegen: University Press.

Kuijpers-Jagtman AM, Prahl-Andersen B (1997) Value of presurgical infant orthodopedics: an intercentre randomized clinical trial. In: Lee ST, Huang M, eds. *Transactions 8th International Congress on Cleft Palate and Craniofacial Related Anomalies.* Stamford Press, Singapore: 1002.

Kunz R, Oxman AD (1998) The unpredictability paradox: review of empirical comparisons of randomized and non randomized clinical trials. *British Medical Journal,* 317: 1185-1190.

Lammer EJ, Chen DT, Hoar RM, Agnish ND, Benke PJ, Braun JT, Curry CJ, Fernhoff PM, Grix AW Jr, Lott IT (1985) Retinoic acid embryopathy. *New England Journal of Medicine,* 313(14): 837-841.

Lantos J (1994) Ethical issues – how can we distinguish clinical research from innovative therapy? *American Journal of Paediatric Haematology and Oncology,* 16: 72-75.

Laumon B, Martin JL, Collet P, Bertucat I, Verney MP, Robert E (1996) Exposure to organic solvents during pregnancy and orofacial clefts: a case-control study. *Reproductive Toxicology,* 10: 15-19.

Leck I (1969) Ethnic differences in the incidence of malformations following migration. *British Journal of Preventive and Social Medicine,* 23: 166.

Leck I, Lancashire RJ (1995). Birth prevalence of malformations in members of different ethnic groups and in the offspring of matings between them, in Birmingham, England. *Journal of Epidemiology and Community Health,* 49: 171-179.

Lederman SA (1991) Current nutritional issues in the perinatal period. In: Kiely M, ed. *Reproductive and Perinatal Epidemiology.* CRC Press, Boca Raton, 99-111.

Lee TK (1999) Effect of unrestricted postoperative sucking following cleft repair on early postoperative course. *Proceedings of the 4th Asian Pacific Cleft Lip and Palate Conference,* Fukuoka, Japan.

Leenstra TS, Kuijpers-Jagtman AM, Maltha JC (1999) The healing process of palatal tissues after operations with and without denudation of bone: an experimental study in dogs. *Scandinavian Journal of Plastic and Reconstructive Surgery and Hand Surgery,* 33: 169-176.

Leimbach DG (1949) *Review of International Vitaminology,* 21: 222.

Lemoine P (1992) Outcome of children of alcoholic mothers (study of 105 cases followed to adult age) and various prophylactic findings. *Annales de Pediatrie* (Paris), 39: 226-35.

Lepkovsky S, Taylor LW, Jukes LW and Almquist HJ (1938). *Hilgardia,* 11: 589.

Levine RJ (1999) The need to revise the Declaration of Helsinki. *New England Journal of Medicine,* 341(7): 531-4.

Levine RJ (2000) Some recent developments in the international guidelines on the ethics of research involving human subjects. *Annals of the New York Academy of Sciences*, 170-178.

Lewanda AF, Jabs EW (2002) Craniosynostosis. In: Rimion DL, Connor JM, Pyentz RE, Korf B, eds. *Principles and Practice of Medical Genetics,* Churchill Livingstone, 4th edition.

Li DK, Daling JR, Mueller BA, Hickok DE, Fantel AG, Weiss NS (1995) Periconceptional multivitamin use in relation to the risk of congenital urinary tract anomalies [see comments]. *Epidemiology*, 6: 212-8.

Liberatos P, Link BG, Kelsey JL (1988) The measurement of social class in epidemiology. *Epidemiologic Rev*iews, 10: 87-121.

Lidral AC, Murray JC, Buetow KH, Basart A, Schearer H, Shiang R, Naval A, Layda E, Magee K, Magee W (1997) Studies of the candidate genes TGFβ 2, MSX1, TGFα and TGFβ 3 in the etiology of cleft lip and palate in the Philippines. *Cleft Palate-Craniofacial Journal,* 34: 1-6.

Lin YT, Tsai CL (2000) Comparative anti-caries effects of tablet and liquid fluorides in cleft children. *Journal of Clinical Dentistry,* 11: 104-106.

Long RE Jr, Semb G, Shaw WC (2000) Orthodontic Treatment of the patient with complete clefts of lip, alveolus, and palate: Lessons of the past 60 years. *Cleft Palate-Craniofacial Journal,* 37: 6: 533 (full text version can be downloaded from http://cpcj.allenpress.com/).

Lowry RB, Renwick DHG (1969) Incidence of cleft lip and palate in British Columbian Indians. *Journal of Medical Genetics,* 6, 67-69.

Lurie P, Bishaw M, Chesney MA, Cooke M, Fernandes ME, Hearst N, Katongole-Mbidde E, Koetsawang S, Lindan CP, Mandel J (1994) Ethical, behavioral, and social aspects of HIV vaccine trials in developing countries. *Jama*, 271(4): 295-301.

Lutz KR, Moore FB (1955) A study of factors in the occurrence of cleft palate. *Journal of Speech and Hearing Disorders,* 20, 271.

Malloy MH, Kleinman JC, Bakewell JM, Schramm WF, Land GH (1989) Maternal smoking during pregnancy: no association with congenital malformations in Missouri 1980-83. *American Journal of Public Health,* 79: 1243-1246.

Marazita ML, Field LL, Cooper ME, Tobias R, Maher BS, Peanchitlertkajorn S, Liu YE (2002) Nonsyndromic cleft lip with or without cleft palate in China: assessment of candidate regions. *Cleft Palate-Craniofacial Journal,* Mar 39(2): 149-56.

Mars M, Plint DA, Houston, WJB, Bergland O, Semb G (1987) The Goslon yarkstick: a new system of assessing dental arch relationships in children with unilateral clefts or of the lip and palate. *Cleft Palate Journal,* 24: 314-332.

Mars M, Asher-McDade C, Brattström V, Dahl E, McWilliam J, Mølsted K, Plint DA, Prahl-Andersen B, Semb G, Shaw WC (1992) The RPS: A six-centre international study of treatment outcome in patients with clefts of the lip and palate. Part 3. Dental arch relationships. *Cleft Palate-Craniofacial Journal,* 29: 405-408.

Marsh JL, Grames LM, Holtman MD (1989) Intravelar veloplasty: A prospective study. *Cleft Palate Journal,* 26: 46-50.

Matte TD, Mulinare J, Erickson JD (1993) Case-control study of congenital defects and parental employment in health care. *American Journal of Industrial Medicine,* 24: 11-23.

McDonald AD, McDonald JC, Armstrong B, Cherry NM, Cote R, Lavoie J, Nolin AD, Robert D (1988) Congenital defects and work in pregnancy. *British Journal of Industrial Medicine,* 45(9): 581-588.

Meinert CL (1986) *Clinical Trials. Design, Conduct, and Analysis.* New York, Oxford University Press.

Meinert CL (1996) *Clinical Trials Dictionary.* Baltimore, The Johns Hopkins Centre for Clinical Trials.

Melnick M, Bixler D, Fogh-Angersen P, Conneally PM (1980) Cleft lip with or without cleft palate: an overview of the literature and an analysis Danish cases born between 1941 and 1968. *American Journal of Medical Genetics,* 6: 83-97.

Melnick M, Jaskoll T, Slavkin HC (1981) Corticosteroid-induced cleft palate in mice and H-2 haplotype: Maternal and embryonic effects. *Immunogenetics,* 13: 443-450.

Miller TJ (1972) Cleft palate formation: a role for pyridoxine in the closure of the secondary palate in mice. *Teratology,* 6(3): 351-6.

Mills JL, Kirke PN, Molloy AM, Burke H, Conley MR, Lee YJ, Mayne PD, Weir DG, Scott JM (1999) Methylenetetrahydrofolate reductase thermolabile variant and oral clefts [see comments]. *American Journal of Medical Genetics,* 86(1): 71-4.

Mitchell LE (1997) Genetic epidemiology of birth defects: nonsyndromic cleft lip and neural tube defects. *Epidemiologic Reviews,* 19: 61-68.

Moher D, Jones A, Cook DJ, Jadad AR, Moher M, Tugwell P, Klassen TP (1998) Does quality of reports of randomized trials affect estimates of intervention efficacy reported in meta-analyses? *Lancet*, 352: 609-613.

Moller P (1972) Epidemiological and genetic study of cleft lip and palate in Iceland. *Alabama Journal of Medical Sciences,* 119-136.

Molloy AM, Daly S, Mills JL, Kirke PN, Whitehead AS, Ramsbottom D, Conley MR, Weir DG, Scott JM (1997) Thermolabile variant of 5,10-methylenetetrahydrofolate reductase associated with low red-cell folates: implications for folate intake recommendations [see comments]. *Lancet*, 349: 1591-1593.

Mølsted K, Asher-McDade C, Brattström V, Dahl E, Mars M, McWilliam J, Plint DA, Prahl-Andersen B, Semb G, Shaw WC (1992) The RPS: A six-centre international study of treatment outcome in patients with clefts of the lip and palate. Part 2. Craniofacial form and soft tissue profile. *Cleft Palate-Craniofacial Journal,* 29: 398-404.

Mølsted K, DahI E, Brattström V, McWilliam J, Semb G (1993a) A six-centre international study of treatment outcomes in children with clefts of the lip and palate: Evaluation of maxillary asymmetry. *Cleft Palate-Craniofacial Journal,* 30: 22-28.

Mølsted K, DahI E, Skovgaard LT, Asher-McDade C, Brattström V, McCance A, Prahl-Andersen B, Semb G, Shaw WC (1993b) The RPS: A multi-centre comparison of treatment regimens for unilateral cleft lip and palate using a multiple regression model. *Scandinavian Journal of Plastic and Reconstructive Surgery and Hand Surgery,* 27: 277-284.

Moore GE, Ivens A, Chambers J, Farrall M, Williamson R, Page DC, Bjornsson A (1987) Linkage of an X chromosome cleft palate gene. *Nature*, 326, 91-92.

Moore LL (2001) Is the jury still out on folic acid and congenital anomalies? *Epidemiology,* 12(2): 141-144.

Morrant DG, Shaw WC (1996) Use of standardized video recordings to assess cleft surgery National Health Service (2001) North West Regional Office, commissioning background paper, Warrington, United Kingdom.

MRC Vitamin Study Research Group (1991) Prevention of neural tube defects: results of the Medical Research Council Vitamin Study. *Lancet,* 338(8760): 131-137.

Munger RG, Romitti PA, Daack-Hirsch S, Burns TL, Murray JC, Hanson J (1996) Maternal alcohol use and risk of orofacial cleft birth defects. *Teratology*, 54: 27-33.

Munger R (2002) Cleft Lip and Palate: from Origin to Treatment. In: Wyzsynski D ed. *Maternal nutrition and oral clefts.* New York, Oxford University Press.

Murray JC, Daack-Hirsch S, Buetow KH, Munger R, Espina L, Paglinawan N, Villanueva E, Rary J, Magee K, Magee W (1997) Clinical and epidemiologic studies of cleft lip and palate in the Philippines. *Cleft Palate-Craniofacial Journal,* 34: 7-10.

Murray JC (2002) Gene/environment causes of cleft lip and/or palate. *Clinical Genetics,* Apr., 61(4): 248-56.

National Health Service (2001) North West Regional Office, commissioning background paper, Warrington, United Kingdom.

Natsume N, Sugimoto S, Yoshida K, Kawai T (1999) Influence of maternal anaemia during early pregnancy on the development of cleft palate [letter; comment]. *British Journal of Oral Maxillofacial Surgery,* 37(4): 330-1.

Nelson MM, Asling CW, Evans HM (1950) Congenital abnormalities in fetal rats resulting from pteroylglutamic acid ("folic") acid deficiency during gestation. *Anatomical Record,* 106: 309.

Nelson MM, Evans HM (1947) Reproduction in the rat on purified diets containing succinylsulfathiazole. *Proceedings of the Society for Experimental Biology and Medicine,* 66: 289.

Nelson MM, Evans HM (1949). Pteroylglutamic acid and reproduction in the rat. *Journal of Nutriton,* 38: 11.

Nicodemus HF, Ferrer MJ, Cristobal VC, de Castro L (1991) Bilateral infraorbital block with 0.5% bupivacaine as post-operative analgesia following cheiloplasty in children. *Scandinavian Journal of Plastic and Reconstructive Surgery and Hand Surgery,* 25: 253-257.

Nishimura H, Takano K, Tanimura T, Yasuda M, Uchida T (1966) High incidence of Several Malformations in the Early Human Embryos as Compared with Infants. *Biologia Neonatorum,* 10: 93-107.

Noback CR, Kupperman HS (1944) *Proceedings of the Society for Experimental Biology and Medicine,* 57: 183.

Nurminen T, Rantala K, Kurppa K, Holmberg PC (1995) Agricultural work during pregnancy and selected structural malformations in Finland. *Epidemiology*, 6: 23-30.

Office of the U.S. Surgeon General (2001) *Women and Smoking: a Report of the Surgeon General.* Washington, D.C., United States Office of the Surgeon General (http: //www.surgeongeneral.gov/library/womenandtobacco).

Olshan AF, Teschke K, Baird PA (1991) Paternal occupation and congenital anomalies in offspring. *American Journal of Industrial Medicine,* 20: 447-475.

Pamplona M, Ysunza A, Guerrero M, Mayer I, Garcia-Velasco M (1996) Surgical correction of velopharyngeal insufficiency with and without compensatory articulation. *International Journal of Pediatric Otorhinolaryngology,* 34: 53-59.

Pamplona MC, Ysunza A, Espinosa J (1999) A comparative trial of two modalities of speech intervention for compensatory articulation in cleft palate children, phonologic approach versus articulatory approach. *International Journal of Pediatric Otorhinolaryngology,* 49: 21-26.

Pamplona MC, Ysunza A, Jimenez-Murat Y (2001) Mothers of children with cleft palate undergoing speech intervention change communicative interaction. *International Journal of Pediatric Otorhinolaryngology,* 59: 173-179.

Peer L, Bryan W, Strean L, Walker J, GC P (1958) Induction of cleft palate in mice by cortisone and its reduction by vitamins. *Journal of the International College of Surgeons,* 30(2): 249-254.

Perinatal HIV Intervention Research in Developing Countries Workshop participants [see comments] (1999) Science, ethics, and the future of research into maternal infant transmission of HIV-1. *Lancet,* 353(9155): 832-835.

Piccioni V, Bologna U (1949) *Clinica Ostetrica e Ginecologica,* 51: 173.

Ping F, Yan F, Chen J (2001) A primary clinical analysis of artificial bone implantation of cleft palate. [Article in Chinese] *Zhonghua Zheng Xing Wai Ke Za Zhi,* 17: 353-355.

Pinsky CA (1984) Experience with historical control studies in cancer immunotherapy. *Statistics in Medicine*, 3: 325-329.

Pollock AV (1986) Historical evolution: methods, attitudes, goals. In: Troidl H, Spitzer WO, Peak B, Mulder DS, McKneally MF, eds. *Principle, practice of research: strategies for surgical investigators.* New York: Springer Verlag, 7-17.

Prabhu KP, Wig J, Grewal S (1999) Bilateral infraorbital nerve block is superior to peri-incisional infiltration for analgesia after repair of cleft lip. *Scandinavian Journal of Plastic and Reconstructive Surgery and Hand Surgery,* 33: 83-87.

Prahl C, Kuijpers-Jagtman AM, van't Hof MD, Prahl-Andersen B (2001) A randomized prospective clinical trial into the effect of infant orthopaedics on maxillary arch dimensions in unilateral cleft lip and palate (Dutchcleft). *European Journal of Oral Sciences,* 109: 1-9.

Proetzel G, Pawlowski SA, Wiles MV, Yin M, Boivin GP, Howles PN, Ding J, Ferguson MW, Doetschman T (1995) Transforming growth factor-beta 3 is required for secondary palate fusion. *Nature Genetics,* Dec 11(4): 409-414.

Rehrmann AH, Koberg WR, Koch H (1970) Long-term post-operative results of primary and secondary bone grafting in complete clefts of the lip and palate. *Cleft Palate Journal,* 7: 206-221.

Roberts CT, Semb G, Shaw WC. (1991). Strategies for the advancement of surgical methods in cleft lip and palate. *Cleft Palate-Craniofac Journal,* 28: 141-149.

Robertson NRE, Jolleys A. (1968). Effects of early bone grafting in complete clefts of lip and palate. *Plastic and Reconstructive Surgery,* 42: 414-421.

Robertson NRE, Jolleys A. (1974). The timing of hard palate repair. *Scandinavian Journal of Plastic and Reconstructive Surgery,* 8: 49-51.

Robertson NRE, Jolleys A. (1983). An 11-year follow-up of the effects of early bone grafting in infants born with complete clefts of the lip and palate. *British Journal of Plastic Surgery*, 36: 438-443.

Robertson NRE, Jolleys A. (1990). A further look at the effects of delaying repair of the hard palate. In: Huddart AG, Ferguson MWJ eds. *Cleft Lip and Palate. Long-term Results and Future Prospects.* Manchester University Press.

Robinson E (1997) Psychological research on visible difference in adults (Chapter 16). In: Lansdown R, Rumsey N, Bradbury E, Carr T, Partridge J eds. V*isibly Different: coping with disfigurement.* Oxford: Butterworth Heinemann.

Romanoff AL, Bauernfeind JC (1942) *Anatomical Record,* 82: 11.

Rosano A, Botto L D, Botting B, Mastroiacovo P (2000) Infant mortality and congenital anomalies from 1950 to 1994: an international perspective [see comments] *Journal of Epidemiology and Community Health,* 54: 660-6.

Ross CA (1999) In: Shils ME, Olson JA, Shike M, Ross AC eds. V*itamin A and retinoids. Modern Nutrition in Health and Disease.* Baltimore, Williams and Wilkins.

Rothman KJ, Moore LL, Singer MR, Nguyen US, Mannino S, Milunsky A (1995) Teratogenicity of high vitamin A intake. *New England Journal of Medicine,* 333(21): 1369-73.

Rovin S, Dachi SF, Borenstein DB, Cotter WB (1964) Mandibulofacial dysostosis, a familial study of five generations. *Journal of Pediatrics,* 65(2): 215-221.

Ryan M (1999) Using conjoint analysis to take account of patient preferences and go beyond health outcomes: an application to in vitro fertilisation. *Social Science and Medicine,* 48: 535-546.

Ryan M, McIntosh E, Shackley P (1998) Methodological issues in the application of conjoint analysis in health care. *Health Economics,* 7: 373-378.

Sackett DL, Straus SE, Richardson WS, Rosenberg W, Haynes RB (2000). In: *Evidence Based Medicine. How to Practice and Teach EBM.* Eds. Churchill Livingstone, Edinburgh.

Salzman EW (1985) Is surgery worthwhile? *Archives of Surgery,* 120: 771-776.

Samet J, Yoon S, Eds (2002) *Women and the Tobacco Epidemic: Challenges for the 21st Century.* Geneva, World Health Organization.

Sampson PD, Streissguth AP, Bookstein FL, Little RE, Clarren SK, Dehaene P, Hanson JW, Graham JM Jr (1997) Incidence of fetal alcohol syndrome and prevalence of alcohol-related neurodevelopmental disorder. *Teratology*, 56(5): 317-326.

Sandy JR, Williams AC, Bearn DR, Mildinhall S, Murphy T, Sell D, Murray JJ, Shaw WC (2001) Cleft Lip and Palate Care in the United Kingdom – The Clinical Standards Advisory Group (CSAG) Study: Part 1 – Background and methodology. *Cleft Palate-Craniofacial Journal,* 38(1): 20-23.

Satokata I, Maas R (1994) Msx1 deficient mice exhibit cleft palate and abnormalities of craniofacial and tooth development. *Nature Genetics,* Apr 6(4): 348-356.

Savitz DA, Schwingl PJ, Keels MA (1991) Influence of paternal age, smoking, and alcohol consumption on congenital anomalies. *Teratology*, 44: 429-40.

Sauberlich HE, Canham JE, Baker EM, Raica N Jr and Herman YF (1972). Biochemical assessment of the nutritional status of vitamin B6 in the human. *American Journal of Clinical Nutrition,* 25(6): 629-42.

Sauberlich HS (1984). In Warren KS, Mahmond AA, eds. *Other water soluble vitamins. Tropical and Geographical Medicine*. New York, McGraw-Hill.

Sauberlich HS (1999) In: *Laboratory tests for the assessment of nutritional status*. Boca Raton, Florida, CRC Press.

Saxen I, Lathi A (1974) Cleft lip and palate in Finland: incidence, secular, seasonal geographical variations. *Teratology*, 9, 217-224.

Scanlon KS, Ferencz C, Loffredo CA, Wilson PD, Correa-Villasenor A, Khoury MJ, Willett WC (1998) Preconceptional folate intake and malformations of the cardiac outflow tract. Baltimore-Washington Infant Study Group. *Epidemiology*, 9: 95-98.

Schardein JL (1993) *Chemically Induced Birth Defects*, Marcel Dekker Inc., New York.

Schnitzer PG, Olshan AF, Savitz DA, Erickson JD (1995) Validity of mother's report of father's occupation in a study of paternal occupation and congenital malformations. *American Journal of Epidemiology,* 141: 872-877.

Schubert J, Schmidt R, Raupach HW (1990) New findings explaining the mode of action in prevention of facial clefting and first clinical experience. *Journal of Cranio-Maxillo- Facial Surgery,* 18: 343-347.

Schutte BC, Murray JC (1999) The many faces and factors of orofacial clefts. *Human Molecular Genetics,* 8: 1853-9.

Scott JM, Weir DG (1998) Folic acid, homocysteine and one-carbon metabolism: a review of the essential biochemistry. *Journal of Cardiovascular Risk,* 5: 223-7.

Sell D, Grunwell P, Mildinhall S, Murphy T, Cornish TAO, Bearn DR, Shaw WC, Murray JJ, Williams AC, Sandy JR (2001) Cleft Lip and Palate Care in the United Kingdom – The Clinical Standards Advisory Group (CSAG) Study: Part 3 – Speech outcomes. *Cleft Palate-Craniofacial Journal,* 38: 1: 30-37.

Sell D, Harding A, Grunwell P (1999) GOS.SP.ASS.'98: an assessment for speech disorders associated with cleft palate and/or velopharyngeal dysfunction (revised). *International Journal of Language and Communication Disorders,* 34(1): 17-33.

Semb G (1988) Effect of alveolar bone grafting on maxillary growth in unilateral cleft lip and palate patients. *Cleft Palate Journal,* 25: 288-295.

Semb G (2001) Scandcleft randomized trials of primary surgery for unilateral cleft lip and palate. Working paper presented to WHO meeting, "International Collaborative Research on Craniofacial Anomalies", Geneva 5-8 November.

Semb G, Roberts CT, Shaw WC (1991) Scope and limitations of single centre studies of cleft lip and palate. In Vig PS, Dryland-Vig K, eds. *Clinical research as the basis of clinical practice.* Monograph 25. Craniofacial Growth Series,Centre of Human Growth and Development, Ann Arbor: University of Michigan, 109-123.

Senders CW, Di Mauro SM, Brodie HA, Emery BE, Sykes JM (1999) The efficacy of perioperative steroid therapy in pediatric primary palatoplaty. *Cleft Palate-Craniofacial Journal,* 3: 340-344.

Severens JL, Prahl C, Kuijpers-Jagtman AM, Prahl-Andersen B (1998) Short-term cost-effectiveness analysis of presurgical orthopedic treatment in children with complete unilateral cleft lip and palate. *Cleft Palate-Craniofacial Journal,* 35(3): 222-226.

Shah M, Foreman DM, Ferguson MWJ. (1992) Control of scarring in adult wounds by neutralizing antibody to transforming growth factor b. *Lancet*, 339: 213-214.

Shah M, Foreman DM, Ferguson MWJ (1996) In: *Fetal wound healing and scarless surgery. Recent Advances in Plastic Surgery,* Churchill Livingstone: 1-12.

Shaw GM, Rozen R, Finnell RH, Todoroff K, Lammer EJ (1998) Infant C677T mutation in MTHFR, maternal peri-conceptional vitamin use, and cleft lip. *American Journal of Medical Genetics,* 80(3): 196-198.

Shaw GM, Todoroff K, Finnell RH, Rozen R, Lammer EJ (1999) Maternal vitamin use, infant C677T mutation in MTHFR, and isolated cleft palate risk [letter]. *American Journal of Medical Genetics,* 85(1): 84-85.

Shaw WC (1995) Commentary to "Ethical Issues in the Case of Surgical Repair of Cleft Palate" by S. Berkowitz. *Cleft Palate-Craniofacial Journal,* 32: 277-280.

Shaw WC, Asher-McDade C, Brattström V, Dahl E, Mars M, McWilliam J, Mølsted K, Plint DA, Prahl-Andersen B, Semb G (1992a) The RPS: A six-centre international study of treatment outcome in patients with clefts of the lip and palate. Part 5. General discussion and conclusions. *Cleft Palate-Craniofacial Journal,* 29: 413-418.

Shaw WC, Dahl E, Asher-McDade C, Brattström V, Mars M, McWilliam J, Mølsted K, Plint DA, Prahl-Andersen B, Roberts CT, Semb G (1992b) The RPS: A six-centre international study of treatment outcome in patients with clefts of the lip and palate. Part 1. Principles and study design. *Cleft Palate-Craniofacial Journal,* 29: 393-397.

Shaw WC, Semb G (1996) Facial growth in orofacial clefting disorders. In Turvey TA, Vig KWL, Fonseca RJ, eds. *Principles and management of facial clefting disorders and Craniosynostosis.* Philadelphia: WB Saunders Co., 28-56.

Shaw WC, Bannister RP, Roberts CT (1999) Assisted feeding is more reliable for infants with clefts – A randomized trial. *Cleft Palate-Craniofacial Journal,* 36(3): 262-268.

Shaw WC, Semb G, Nelson P, Brattström V, Mølsted K, Prahl-Andersen B, Gundlach KKH. (2001) The Eurocleft Project 1996-2000: Overview. *Journal of Cranio Maxillo-Facial Surgery,* 29: 131-140.

Shields DC, Kirke PN, Mills JL, Ramsbottom D, Molloy AM, Burke H, Weir DG, Scott JM, Whitehead AS (1999) The "thermolabile" variant of methylenetetrahydrofolate reductase and neural tube defects: An evaluation of genetic risk and the relative importance of the genotypes of the embryo and the mother. *American Journal of Human Genetics*, 64: 1045-55.

Shiono PH, Klebanoff MA, Berendes HW (1986) Congenital malformations and maternal smoking during pregnancy. *Teratology*, 34: 65-71.

Soltan MH, Jenkins DM (1982) Maternal and fetal plasma zinc concentration and fetal abnormality. *British Journal of Obstetrics and Gynecology,* 89: 56-8.

Soprano DR, Soprano KJ (1995) Retinoids as teratogens. *Annual Review of Nutrition,* 15: 111-132.

Sozen MA, Suzuki K, Tolarova MM, Bustos T, Fernandez Iglesias JE, Spritz RA (2001) Mutation of PVRL1 is associated with sporadic, non-syndromic cleft lip/palate in northern Venezuela. *Nature Genetics,* Oct 29(2): 141-142.

Spielman RS, Ewens WJ (1996) The TDT and other family-based tests for linkage disequilibrium and association. *American Journal of Human Genetics*, Nov 59(5): 983-9.

Spriestersbach DC, Dickson DR, Fraser FC, Horowitz SL, McWilliams BJ, Paradise JL, Randall P (1973) Clinical research in cleft lip and palate: the state of the art. *Cleft Palate Journal,* 10: 113-165.

Stern JM, Simes RJ (1997) Publication bias: evidence of delayed publication in a cohort study of clinical research projects. *British Medical Journal,* 315: 640-645.

Stoll C, Dott B, Alembik Y, Koehl C (1999) Maternal trace elements, vitamin B12, vitamin A, folic acid, and fetal malformations. *Reproductive Toxicology,* 13: 53-57.

Suzuki K, Hu D, Bustos T, Zlotogora J, Richieri-Costa A, Helms JA, Spritz RA (2000) Mutations of PVRL1, encoding a cell-cell adhesion molecule/herpesvirus receptor, in cleft lip/palate-ectodermal dysplasia. *Nature Genetics,* Aug 25(4): 427-430.

Temple IK (1989) Stickler's syndrome. *Journal of Medical Genetics,* 26(2): 119-126.

Thomas DC, Petitti DB, Goldhaber M, Swan SH, Rappaport EB, Hertz-Picciotto I (1992) Reproductive outcomes in relation to malathion spraying in the San Francisco Bay Area, 1981-1982. *Epidemiology*, 3: 32-39.

Tolarova M (1982) Peri-conceptional supplementation with vitamins and folic acid to prevent recurrence of cleft lip [letter]. *Lancet* 2(8291): 217.

Tolarova M (1987) Orofacial clefts in Czechoslovakia. Incidence, genetics and prevention of cleft lip and palate over a 19-year period. *Scandinavian Journal of Plastic and Reconstructive Surgery and Hand Surgery,* 21(1): 19-25.

Tolarova M, Harris J (1995) Reduced recurrence of orofacial clefts after peri-conceptional supplementation with high-dose folic acid and multivitamins. *Teratology,* 51(2): 71-8.

Tonelli MD, Benditt JO, Albert RK (1996) Lessons from lung volume reduction surgery. *Chest,* 110: 230-238.

Torrance GW (1976) Social preferences for health states: An empirical evaluation of three measurement techniques. *Socio Economic Planning Sciences,* 10(3): 129-36.

Townsend P (1990) Widening inequalities of health in Britain: a rejoinder to Rudolph Klein. *International Journal of Health Services,* 20(3): 363-72.

Turner LA, Morrison H, Prabhakaran VM (2001) Do we need another randomized controlled trial of folic acid alone? *Epidemiology,* 12(2): 262-265.

Tyan ML (1982) Difference in the reported frequencies of Cleft Lip plus Cleft Lip and Palate in Asians born in Hawaii and the Conteninental United States. *Proceedings of the Society for Experimental Biology and Medicine,* 171: 41-45.

Umbach DM, Weinberg CR (2000) The use of case-parent triads to study joint effects of genotype and exposure. *American Journal of Human Genetics,* Jan, 66(1): 251-261.

Van den Boogaard MJ, Dorland M, Beemer FA, van Amstel HK (2000) MSX1 mutation is associated with orofacial clefting and tooth agenesis in humans. *Nature Genetics,* Apr, 24(4): 342-343.

Van den Eeden SK, Karagas MR, Daling JR, Vaughan TL (1990) A case-control study of maternal smoking and congenital malformations. *Paediatric and Perinatal Epidemiology,* 4: 147-155.

Vanderas AP (1987) *Social and biological effects on perinatalmortality.* Budapest: WHO, 1.

VPI Surgical Trial Group (2001) A randomized trial of pharyngoplasty -versus- pharyngeal flap for individuals with velopharyngeal insufficiency following cleft palate repair. Paper presented at the 9th International Congress on Cleft Palate and Related Craniofacial Anomalies, Göteborg, Sweden, 25-29 June.

Von Krebig VT, Stoeckenius M (1978) Fehlbildungen beim menschen: lippen-kiefer-gaumenspalten (German). *Medizinische Monatsschrift fur Pharmazeuten (Stuttgart),* 1(8): 243-249.

Waitzman NJ, Romano PS, Scheffler RM (1994) Estimates of the economic costs of births defects. *Inquiry,* 31: 188-205.

Warkany J (1954) *Congenital malformations induced by maternal dietary deficiency: experiments and their interpretation.* The Harvey Lectures. York THSoN. New York, Academic Press. Series XLVIII: 89-109.

Warkany J, Nelson RS (1940) Appearance of skeletal abnormalitites in the offspring of rats reared on a deficient diet. *Science,* 92: 383-384.

Werler MM, Lammer EJ, Rosenberg L, Mitchell AA (1990) Maternal cigarette smoking during pregnancy in relation to orofacial clefts. *American Journal of Epidemiology,* 132: 926-932.

Werler MM, Lammer EJ, Rosenberg L, Mitchell AA (1991) Maternal alcohol use in relation to selected birth defects. *American Journal of Epidemiology,* 134: 691-698.

West KP Jr, Katz J, Khatry SK, LeClerq SC, Pradhan EK, Shrestha SR, Connor PB, Dali SM, Christian P, Pokhrel RP, Sommer A (1999) Double blind, cluster randomized trial of low dose supplementation with vitamin A or beta carotene on mortality related to pregnancy in Nepal. The NNIPS-2 Study Group. *British Medical Journal,* 318(7183): 570-575.

Whitaker LA, Randall P, Graham WP III, Hamilton RW, Winchester R (1972) A prospective and randomized series comparing superiorly and inferiorly based posterior pharyngeal flaps. *Cleft Palate Journal,* 9: 304-311.

Whitby D, Ferguson MWJ (1991) The extracellular matrix of lip wounds in fetal, neonatal and adult mice. *Development*, 112, 651-668.

Whitby KE, Collins TF, Welsh JJ, Black TN, Flynn T, Shackelford M, Ware SE, O'Donnell MW, Sundaresan PR (1994) Developmental effects of combined exposure to ethanol and vitamin A. *Food and Chemical Toxicology,* 32(4): 305-320.

Windsor R (2002) Smoking, cessation and pregnancy. In: Samet J, Yoon S, eds. *Women and the tobacco epidemic: challenges for the 21st century.* Geneva, World Health Organization: 147-162.

Williams AC, Bearn DR, Mildinhall S, Murphy T, Sell D, Shaw WC, Murray JJ, Sandy JR (2001) Cleft Lip and Palate Care in the United Kingdom – The Clinical Standards Advisory Group (CSAG) Study: Part 2 – Dentofacial outcomes, psychosocial status and patient satisfaction. *Cleft Palate-Craniofacial Journal,* 38(1): 24-29.

Williams WN, Seagle B, Nackashi AJ, Marks R, Boggs SR, Kemker J, Wharton W, Bzoch KR, Dixon-Wood V, Pegoraro-Krook MI, de Souza Freitas JA, Garla LA, de Souza TV, Silva MLN, Neto JSM, Montagnoli LC, Martinelli APMC, Marques IL, Zimmerman MC, Feniman MB, de Azevedo Bento Gonçalves CG, Piazentin SH, Graciano MI, Chinellato MCMP, Lauris JRP, Capelozza Filho l, Jorge JC (1998) A methodology report of a randomized prospective clinical trial to assess velopharyngeal function for speech following palatal surgery. *Controlled Clinical Trials,* 19: 297-312.

Womersley J, Stone DH (1987) Epidemiology of facial clefts. *Archives of Disease in Childhood,* 62: 717-720.

Wong WY, Eskes TK, Kuijpers-Jagtman AM, Spauwen PH, Steegers EA, Thomas CM, Hamel BC, Blom HJ, Steegers-Theunissen RP (1999) Nonsyndromic orofacial clefts: association with maternal hyperhomocysteinemia. *Teratology,* 60(5): 253-257.

World Cancer Research Fund (1997) Food, nutrition and the prevention of cancer: a global perspective. http://www.wcrf-uk.org/

World Health Organization (1998) *World Atlas of Birth Defects* (1st edition), WHO/HGN/ICBDMS/EUROCAT/ATLAS/98.5: 1-111.

World Health Organization, WHO International Classification for Functioning and Disability (ICIDH-2) http://www.who.int/icidh

World Medical Association (2000) *Declaration of Helsinki* (Revisions 2000: http://www.wma.org/).

Wray C, Dann J. Holtmann B (1979) A comparison of three technics of palatorrhaphy: in-hospital morbidity. *Cleft Palate Journal,* 16: 42-45.

Wyszynski DF, Beaty TH (1996) Review of the role of potential teratogens in the origin of human nonsyndromic orofacial clefts. *Teratology*, 53: 309-317.

Wyszynski DF, Duffy DL, Beaty TH. (1997) Maternal cigarette smoking and orofacial clefts: a meta-analysis. *Cleft Palate-Craniofacial Journal,* 34: 206-210.

Yamaguchi T (1968) Effects of riboflavin, pyridoxine, and folic acid on the incidence of malformations in the rat caused by hypervitaminosis A (translated from Japanese). *Congenital anomalies*, 8: 175-182.

Yeow VKL, Lee ST, Lambrecht TJ, Barnett J, Gorney M, Hardjowasito W, Lemperle G, McComb H, Natsume N, Stranc M, Wilson L (1997) Recommendations of the international task force on volunteer cleft missions. In Lee ST, Huang M eds. *Transactions 8th International Congress on Cleft Palate and Related Craniofacial Anomalies.* Singapore: Stamford Press; xliii-li.

Ysunza A, Pamplona MC, Mendoza M, García-Velasco M, Aguilar MP, Guerrero ME (1998) Speech outcome and maxillary growth in patients with unilateral complete cleft lip/palate operated on at 6 versus 12 months of age. *Plastic and Reconstructive Surgery,* 102: 675-679.

Ysunza A, Pamplona MC, Mendoza M, Molina F, Martinez P, Garcia-Velasco M, Prada N (2001) Surgical treatment of submucous cleft palate: a comparative trial of modalities for palatal closure. *Plastic and Reconstructive Surgery,* 107: 9-14.

Zhang J, Cai WW (1991) Severe vomiting during pregnancy: antenatal correlates and fetal outcomes. *Epidemiology*, 2: 454-457.

Annex 1: European Collaboration on Craniofacial Anomalies (EUROCRAN)

Background

In 2000 a partnership of 14 European centres was awarded funding under the European Commission's Framework V Programme for research to carry out the EUROCRAN project. EUROCRAN, which will run for four years – between 2000 and 2004 – brings together researchers from a range of clinical/scientific disciplines with the shared aim of improving the management and understanding of craniofacial anomalies (CFA). This will be achieved through five inter-related work packages *(see Annex 2)*.

Participation

The work described in the work packages will be achieved through the development of common core protocols and with the involvement of participating centres from the European Union, the European Economic Area and the states of Central and Eastern Europe.

If you would like to participate or require more information please contact:

Pauline Nelson
Projects Co-ordinator
Department of Oral Health and Development
University Dental Hospital of Manchester
Manchester M15 6FH
United Kingdom
Tel: +44-161-275-6865
Fax: +44-161-275-6636/6794
E-mail: Pauline.Nelson@man.ac.uk

Further materials compiled by EUROCRAN is included as follows:

Annex 2: Work packages
Annex 3: Policy statements
Annex 4: Practice guidelines
Annex 5: General principles governing record-taking (provisional)

Annex 2: Work packages

Work package 1: Surgical trial

A multi-centre randomized trial of the primary surgery for infants with complete unilateral cleft lip and palate will compare four surgical methods in three concurrent trials. Infants will be randomized to a surgical method common to all three trials or the usual local method. Surgeons will do an approximately equal number of their usual method and the common method according to the randomization scheme maintained at the trial coordinating centre.

Work package 2: Gene/environment study

A population-based multi-centre case-parent triad study to investigate gene/environment, and gene/gene interactions and genetic susceptibility polymorphisms operating in the etiology of orofacial clefting (OFC) will be carried out. Mothers with affected babies who are participating in the study will complete a structured interview regarding diet and other exposures in the periconceptual period. In addition samples will be taken from the mother, father and child for DNA extraction and genotyping. Gene variant analysis will then be carried out to investigate the interaction between:

(a) maternal nutritional factors and maternal/fetal metabolism genes;

(b) genes coding for xenobiotic metabolism enzymes and environmental teratogens;

(c) developmental genes (growth factor genes, homeobox genes) and environmental factors.

Work package 3:
A chromosomal approach to identifying OFC genes

A cohort of European patients with OFC associated with apparently balanced chromosomal rearrangements will be identified and their breakpoints/clinical phenotypes catalogued. A bank of immortalized cell lines will be established from a sub-set of these patients where two or more instances of a specific breakpoint has been associated with OFC. Both high throughput molecular cytogenetic techniques and available sequence data from the Human Genome Project will be used to identify genes that have been interrupted by two or more breakpoints. These genes will be fully characterized and screened for mutations and polymorphisms that may be used in Work Package 2.

Work package 4:
Molecular diagnosis of monogenic craniofacial anomalies

The aim is to develop sensitive molecular assays for the mutations underlying a number of craniofacial malformation syndromes using Treacher Collins Syndrome (TCS) as a paradigm. This expertise will be disseminated to other molecular laboratories in the EUROCRAN group such that it will be available on a local basis.

Work package 5:
Directory of resources

A European Craniofacial Anomalies Directory of resources for European teams will be created. The Directory will include:

- a register of clinical teams, their reported clinical protocols and research interests, governmental and non-governmental agencies involved in the treatment and research of CFA, European CFA surgical missions to developing countries, model research protocols and examples of successful grant applications;
- a dynamic database/website of emerging data from Work Packages 2 and 3 such as chromosomal breakpoints, candidate genes and study protocols;
- a "good practice" set of clinical records for consecutive cases of OFC including cephalometric radiographs, dental casts, photographs and speech samples so that teams can compare local outcomes to the reference set;
- a prospective registry of complex treatment outcomes using distraction osteogenesis as an exemplar.

Annex 3: Policy statements

(1) The professional involved in cleft care should provide basic information on cleft care and on the proposed treatment to any potential patient and/or patient's guardian. Basic information should contain at least:

- a general explanation of the condition, the reasons for treatment, what may or may not be achieved, the stages of treatment including examination, record collection and general protocols – this may be supplemented by leaflets, booklets or other kinds of information;
- an explanation of why a specific treatment is considered necessary for the individual patient, what specifically is involved: method, timing, duration cost, what the specific goal is and possible side effects.

(2) When a treatment is considered, the professional engaged in cleft care should take into consideration the desires and attitudes of the patient and/or those of the patient's guardian. The professional should also pay attention to and inform the patient/patient's guardian of the risks and benefits inherent in the potential alternative treatment options, including no treatment or no further treatment.

(3) If requested, it is the professional's responsibility to provide a procedure for obtaining a second opinion for the patient. If requested, this procedure should be communicated to the patient before treatment starts.

(4) After an episode of treatment, the professional engaged in cleft care should inform the patient and/or patient's guardian on:

- outcome of treatment relative to the defined goal;
- undesirable effects of treatment;
- expected future development.

(5) The professional engaged in cleft care should analyse and document any complaints or praise expressed by the patient and/or the patient's guardian.

(6) The professional engaged in cleft care should give consideration to the burden of the treatment. Considerations should include financial as well as non-financial burden, such as treatment duration, effort from the patient and/or patient's guardian and discomfort as a result of treatment.

(7) During the process of treatment, the professional involved in cleft care should continuously evaluate treatment progress against the planned treatment and act accordingly.

(8) Organizations and institutes responsible for the provision of cleft care should:

- encourage the cleft professional to follow the policies described above and to acknowledge the patient's rights;
- recognize and encourage the professional's right to provide treatment that can be expected to improve the patient's condition whilst minimizing adverse effects;
- recognize and encourage that decisions on treatment priority should be based on criteria proposed by the cleft professionals in consultation with the patient and/or patient's guardian. This is especially so in a situation with insufficient treatment resources;
- recognize and encourage that access to treatment should not depend on the patient's ability to pay;
- recognize that cooperation of the patient with the advice and instructions of the cleft professional is necessary in order to achieve a successful result.

Annex 4: Practice guidelines

Part I: Health-care needs

(1) **Neonatal emotional support and professional advice:** In the event of prenatal diagnosis and as soon as possible after the birth of a child with a cleft, parents should be given emotional support and advice about the child's future management by a specialist in cleft care.

(2) **Neonatal nursing:** Difficulties in feeding are common in the early days of life and specialist advice on feeding should be provided.

(3) **Surgery:** Primary surgery to close clefts of the lip and/or palate should be performed by an experienced and qualified surgeon according to a protocol agreed by the team. Further corrective procedures may be necessary for some patients in later years and should be performed by an experienced and qualified surgeon according to a protocol agreed by the team.

(4) **Orthodontic/orthopaedic treatment:** For children with cleft lip and palate orthodontic/orthopaedic treatment should be available when necessary and should be performed by an experienced orthodontist.

(5) **Speech and language therapy:** Early assessment of speech and language problems, advice to parents and the availability of corrective therapy by an experienced speech and language therapist should be provided.

(6) **Ear, nose and throat (ENT):** ENT problems should be identified at an early stage and the necessary therapy should be provided.

(7) **Clinical genetics/paediatric developmental medicine:** As cleft lip and/or palate may be associated with other anomalies early assessment and diagnosis is necessary. Genetic counselling for patients and families should be available.

(8) **Emotional support and professional advice for the growing child and its parents:** Emotional support and professional advice for parents, patients and their environment is often necessary and should be available.

(9) **Dental care:** Regular dental care should be available.

(10) **National register:** A national register should be in place for accurate recording of children born with cleft lip and/or palate and related craniofacial anomalies.

Part II: Organization of services

(1) Cleft care should be provided by a multidisciplinary team of specialists.

(2) Members of the team should have special training in cleft care.

(3) The team should agree on the stages of treatment including the examination, record collection and general protocols.

(4) There should be one person responsible for quality improvement and communication within the team.

(5) Coordination of the care of individual patients is important since numerous specialities are involved. This should be the responsibility of one member of the team.

(6) The number of patients referred to the team should be sufficient to sustain the experience and specialist skills of all team members and to allow evaluation/audit of the team's performance within a reasonable period of time. It has been recommended that cleft surgeons, orthodontists and speech therapists should treat at least 40-50 new cases annually. However, it is recognized that individual member states have the right to provide care for their own population.

Part III: Finances

Resources should be available to cover the following care for children with cleft lip and palate:

(1) Emotional support and professional advice during the neonatal period.

(2) Neonatal nursing.

(3) Surgery.

(4) Orthodontic/orthopaedic treatment.

(5) Speech and language assessment and therapy.

(6) Ear, nose and throat treatment.

(7) Clinical genetics/paediatric developmental medicine.

(8) Emotional support for the growing child and its parents.

(9) Travel expenses.

(10) General dental care including cleft related prosthodontics.

Annex 5: General principles governing record-taking (provisional)

1. Records for treatment planning/monitoring

- Clinical records should be taken for individual patients to allow treatment planning, monitoring treatment progress and treatment evaluation.
- The timing and nature of these records will depend on the clinical protocols followed by individual teams.
- Treatment and associated record-taking protocols should be agreed and clearly set out by the cleft team.

2. Records for quality improvement/research

Additional records may be taken for a number of other reasons:

- follow-up of a series of patients to provide an overview of the outcome of care;
- to allow retrospective comparisons of different protocols;
- as part of a prospective clinical trial with ethical approval;
- as part of an agreed protocol for intercentre quality-improvement comparisons or comparison against known standards;
- as part of an agreed research protocol;
- other reasons, such as medico-legal, second opinion.

3. Safeguards

- Exposure of patients to unnecessary radiation should be avoided.
- Research and quality-improvement records should only be taken when there is an established written protocol on how they will be put to use.
- Research and quality improvement records should not be taken without the consent of the patient/parent/guardian.
- Research and quality improvement records should coincide as far as possible with the records for treatment planning/monitoring (statement 1 above).

4. Timing of minimum records

Table 1: Complete cleft lip and palate (UCLP & BCLP)

Timing	Models	Lateral skull radiograph	Photographs	Speech/ tympanometry	Audiometry	Patient/parent satisfaction
Primary surgery	✓		✓			
3 years				✓*	✓*	
5/6 years	✓		✓	✓	✓	
10 years	✓	✓	✓	✓	✓	
18+ years	✓	✓	✓	✓		✓

* = If hard palate is closed.

Table 2: Cleft palate only

Timing	Models	Lateral skull radiograph	Photographs	Speech/ tympanometry	Audiometry	Patient/parent satisfaction
Primary surgery	✓		✓			
3 years				✓	✓	
5/6 years	✓			✓	✓	
15/16 years	✓	✓	✓	✓	✓	✓

Table 3: Cleft lip only

Timing	Models	Photographs	Patient/ parent satisfaction
Primary surgery	✓*	✓	
3 years			
5/6 years	✓*	✓	
10 years			
18+ years		✓	✓

* = Only in cases with cleft of the alveolus as well as cleft lip.

Table 4: Alveolar bone grafting

Timing	Intra-oral x-ray	Photographs
Just before bone graft	✓	✓
6 months after graft	✓	
After canine fully erupted	✓	✓

Table 5: Pharyngoplasty

Timing	Speech sample
Just before operation	✓
One year after operation	✓

Table 6: Orthognathic surgery

Timing	Lateral cephalogram	Models
Just before operation	✓	✓
One year after operation	✓	✓

5. Record-taking methodology (provisional)

Discussion of the precise method of record taking is continuing. The following however, provide a suggestion that is currently being used widely in Europe.

5.1 Photographs

Background: The vast majority of surgeons and orthodontists use still photographs for documentation of clefts. Very few clinicians use video recording of clefts pre- or post-operatively. If photographs of clefts which appear in any publication are examined it is clear that there is no uniformity or standardization of the way in which such photographs are taken. For comparative studies the following views are recommended.

Basic views to be taken:

- Frontal, both laterals, inferior (columellar) view.
- Three-quarter (¾) facial (oblique) view.

Dynamic views:

- During smiling and whistling – in the cooperative older patient, these views will give an idea of function of the circum-oral musculature.
- Video recording will be better for assessing circum-oral movement but this will also need to be standardized and cannot be used routinely at present.

Lighting and background:

- Lighting for the studio should be two fill-in lights and the main light synchronized with the camera. In the ward or operating theatre a single flash unit is appropriate.
- The background should be blue.

Framing of the picture:

- For frontal view, the camera should be set at a ratio of 1:8.
- For lateral view, the camera should be set at a ratio of 1:8.
- For inferior view, the camera should be set at a ratio of 1:4.

Camera and lens:

- Suggested camera is Nikon F3 with a 105mm lens or equivalent.
- Film type and speed need not be standardized.

5.2 Dental casts

Background: Dental casts need to be made from well-taken impressions which include all teeth, the palate and the buccal sulcus. For comparative studies the casts need to be prepared in a standard manner so that the source of the models cannot be identified.

Preparation: Models should be:

- cast in vacuum-mixed white stone, for example Crystacal R;
- hand trimmed, using a fine wheel to the standard heights and angles shown in Figures 1-3 below;
- finished with wet and dry paper (not soaped).

Figure 1:
Base angles of a dental cast

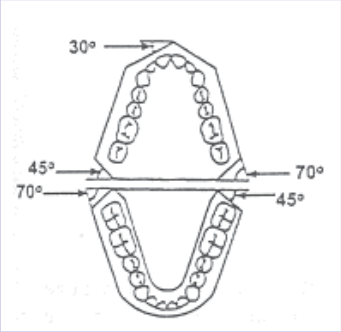

Figure 2:
Dental casts of a 10-year old

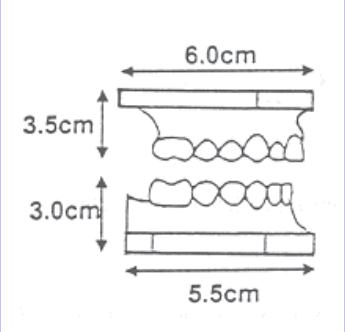

Figure 3:
Dental casts of a 5-year old

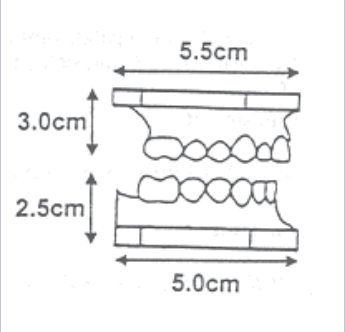

5.3 Speech

Background: A fundamental problem for speech and language pathology has been the lack of an acceptable framework for measuring speech. Various groups have proposed procedures for measuring, recording and reporting speech data cross-linguistically, but to date there is no one recognized method.

Proposals have come from Henningsson and Hutters (1997), and also from Dalston, Marsh, Vig, Witzel and Bumstead (1988). In Britain, Sell, Harding and Grunwell (1994) developed the Great Ormond Street speech assessment (GOS.SP.ASS) tool. This is now a nationally-agreed speech

assessment tool for cleft palate and/or velopharyngeal incompetence in English. From GOS.SP.ASS, Razzell, Harding and Harland (1987) devised the Cleft Audit Protocol for Speech (CAPS), a more succinct protocol specifically designed for audit purposes.

Ages: 3-4 years; 5-6 years; 10 years; 15-16 years (cleft palate only); 18+ years (UCLP and BCLP)

Equipment: A good quality audio recording using a high quality microphone.

Variables:

- **Intelligibility**: a rating should be made upon spontaneous speech. The CAPS scale can be used to judge how "understandable" a persons speech would be to familiar and unfamiliar listeners (there are however flaws with this method).
- **Nasality**: the presence/absence and degree of hypernasality, hyponasality, audible nasal emission and nasal turbulence can be judged and rated on a five-point scale (see CAPS). An agreed instrumental method for assessing nasality has yet to be recommended.
- **Assessing articulation**: set sentences and single words containing consonant sounds in different word positions (beginning, middle and end) should be repeated, for example "Bob is a baby boy" or equivalent in the native language, and recorded for CAPS. Targeted sounds are*: p, b, f, n, t, d, s, ʃ, ʧ, ʤ, k, g.

  Errors made can be broadly categorized or grouped according to CAPS:
  - front of mouth oral-sound errors;
  - back of mouth oral-sound errors;
  - non-oral sounds;
  - passive errors;
  - immaturities.

References:

- Henningsson G, Hutters B. Perceptual assessment of cleft palate speech with special reference to minimum standards for intercentre comparisons of speech outcome. In: Lee ST, Huang M, eds. *Transactions 8th International Congress on Cleft Palate and Related Craniofacial Anomalies.* Stamford Press Pte Ltd: Singapore 1997.
- Dalston M, Marsh JL, Vig KW, Witzel MA, Bumstead RM. Minimal standards for reporting the results of surgery on patients with cleft lip, cleft palate, or both: A Proposal. *Cleft Palate Journal,* 1988; 25: 3-7.
- Sell D, Harding A, Grunwell P A. Screening assessment of cleft palate speech (Great Ormond Street speech assessment: GOS.SP.ASS). *European Journal of Disorders of Communication,* 1994; 29: 1-15.
- Harding A, Harland K, Razzell R. *Cleft Audit Protocol for Speech (CAPS).* Available from K Harland, Speech and Language Therapy Department, St. Andrew's Plastic Surgery Centre, Stock Road, Billericay, Essex CM12 OBH, United Kingdom, 1987.

* Depending on the speech sound in each language, but should contain plosives, fricatives and a nasal consonant (p, b, t, d, k, g, f, s, n).